Smoke Alarm Requirements

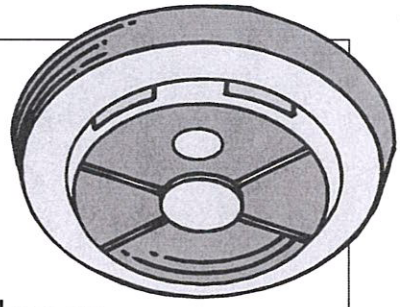

When Selling a One- or Two-Family Residence as of December 2016

The Board of Fire Prevention Regulations (BFPR) adopted revised smoke alarm regulations that go into effect December 1, 2016. The changes apply only to one- and two-family residences built before January 1, 1975 that have not been substantially altered. If built or altered after that date, the smoke alarm requirements are established by the State Building Code.

Working smoke alarms installed prior to December 1, 2016 (that met requirements) can continue to be used until they are 10 years old or have exceeded the manufacturer's recommended life.

Minimum Requirements for New Smoke Alarms in One- and Two-Family Residences Built before 1975

Smoke alarms must be installed in accordance with the manufacturer's instructions:

- On every habitable level of the residence.
- In the basement.
- On the ceiling at the base of each stairway leading to a floor above including the basement (but not within stairways).
- On the ceiling outside each separate sleeping area.
- Must be photoelectric. Can be in combination with ionization or carbon monoxide alarms.
- Must contain a hush feature to silence nuisance alarms.
- May be battery-powered, hardwired, or a combination of both.
  - New battery-powered alarms must have 10-year, sealed, non-rechargeable, non-replaceable batteries.
  - Battery-powered alarms that are more than 10 years old, or have expired must be replaced (check with the manufacturer) with 10-year, sealed, non-rechargeable, non-replaceable, battery-powered ones.
- In two-family dwellings, smoke alarms are required in common areas shared by residents.

Recommendations for Enhanced Protection

- Additional battery-powered smoke alarms can be installed. Fire officials recommend an alarm on the ceiling of each bedroom.
- Non-required smoke alarms may have replaceable batteries.

(over) ➔

FireFactors

Office of the State Fire Marshal • www.mass.gov/dfs • (978) 567-3300

- Non-required smoke alarms may be photoelectric, ionization or both.

Combination Smoke and Carbon Monoxide Alarms

Combination smoke and carbon monoxide (CO) alarms must follow the requirements for smoke alarms for placement and battery power. Be aware that the carbon monoxide part of the alarm may fail before 10 years (it will sound an end-of-life alarm) and the device must be replaced. New battery-powered combination smoke and CO alarms must have a 10-year, sealed, non-replaceable battery.

Wireless and Networked Smoke Alarms

Wireless smoke alarms or networked smoke alarms with photoelectric sensing technology can have a replaceable battery as long as the battery lasts for at least one year. Wireless and networked alarms meet minimum requirements when they are installed following the manufacturer's instructions and are in required locations.

How Can I Get a Certificate of Compliance?

After you have a closing date:

- Contact the local fire department to schedule an inspection of your smoke and carbon monoxide alarms right away. Don't wait until the last minute!
- Fees are determined by each city/town.

Prior to the arrival of the fire department:

- Make sure that your posted street number is visible from the street (MGL c.148 § 59).
- Make sure that you have the proper type of alarms.
  - The local fire department may require that they be taken down for compliance verification.
  - Make sure all alarms are installed in the proper locations.
  - Make sure that all alarms are working properly.
- After passing the inspection, the fire department will issue your Certificate of Compliance.
  - This document will probably be required at the closing.

How Do Smoke Alarms Work?

There are two common types of smoke alarms, ionization and photoelectric. In both types, smoke particles enter the device and interrupt the sensing system to create the alarm.

Photoelectric Smoke Alarms

- Use light to detect smoke.
- Are more effective at detecting smoldering fires (slow fires), which have been attributed to more fatal fires.
- Are also effective at detecting flaming fires (fast fires).

Ionization Smoke Alarms

- Use radiation to detect smoke.
- Are more effective at detecting flaming fires (fast fires).
- Increase the risk of nuisance alarms caused by steam or cooking smoke.

For more information, visit the Department of Fire Services website at www.mass.gov/dfs, contact your local fire department, or call the Code Compliance Helpdesk at 978-567-3375.