FYFESHIRE POND DAM
MODIFICATION AND REPAIR
BOLTON, MASSACHUSETTS
NOTICE OF INTENT

DRAWING INDEX

SHEET NO.	TITLE
1	COVER SHEET
2	EXISTING CONDITIONS
3	PROPOSED CONDITIONS & MATERIALS
4–5	DETAILS
WET1	WETLAND IMPACTS

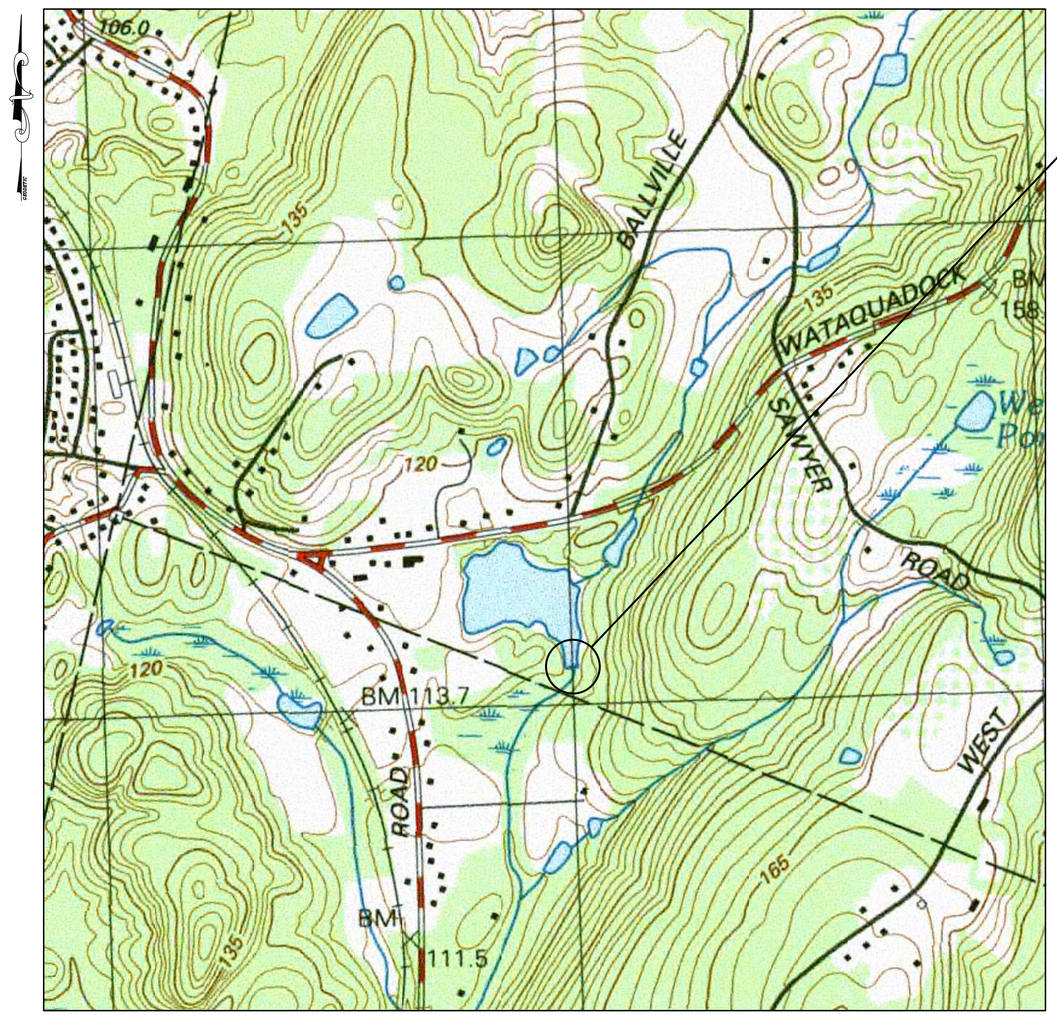

LOCATION MAP
SCALE 1" = 500'

Designed By: DWB
Drawn By: DWB
Checked By: SDC
CAD File: SITE PLAN

COMMONWEALTH OF MASSACHUSETTS
KAREN S. FUNG
No. 47106
REGISTERED PROFESSIONAL ENGINEER

Drawing Scale: AS SHOWN
Drawing date: 7/11/13

Rev.	Date	Revision	By

COVER

PREPARED FOR
TOWN OF BOLTON
CONSERVATION COMMISSION
BOLTON, MASSACHUSETTS

Lenard Engineering, Inc.
Civil, Environmental and Hydrogeological Consultants
2210 Main Street, GLASTONBURY, CT (860) 659-3100
140 Willow Street, WINSTED, CT (860) 379-6669
19 Midstate Drive, AUBURN, MA (508) 721-7600

Drawing #: 1 OF 6

Job #: 13-700

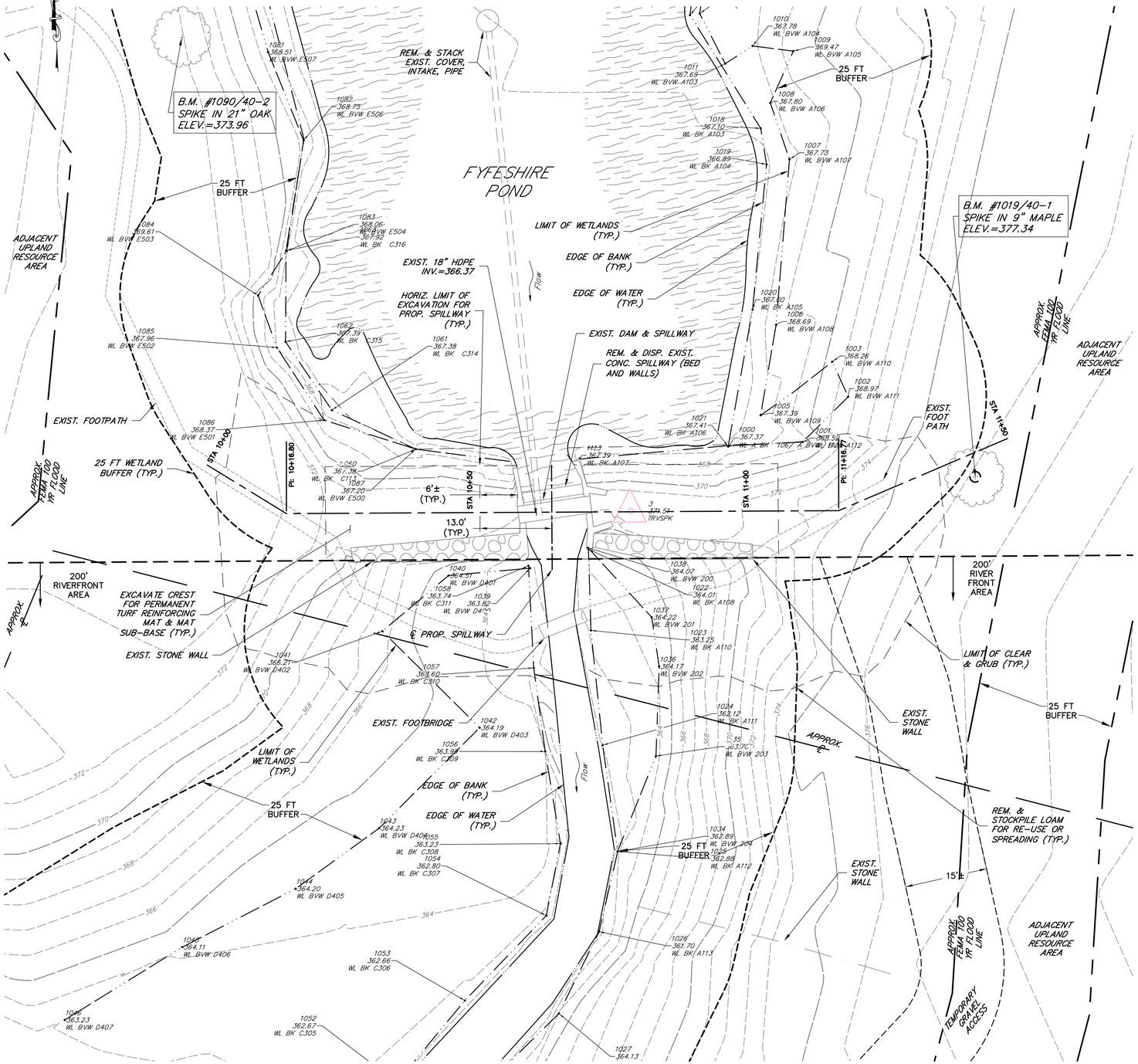

PLAN

SCALE = 1" =10'

GRAPHIC SCALE

(IN FEET)
1 inch = 10 ft.

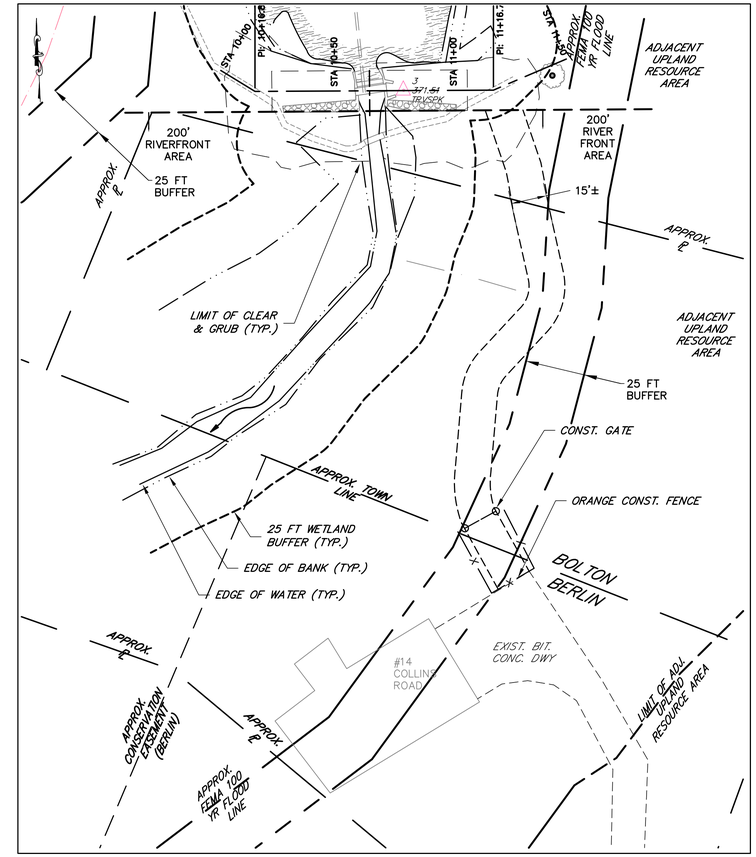

TEMP. ACCESS NOTES:

1. REMOVE & RESET ORANGE CONSTRUCTION FENCE AS NEEDED ACROSS OPENING AT DRIVEWAY.
2. IN ALL CASES, CLOSE OFF OPENING AT DRIVEWAY WITH ORANGE CONSTRUCTION FENCE DURING NON-WORKING HOURS.
3. STRIPPING OF SOIL UNDER THE TEMPORARY ACCESS ROAD IS NOT ALLOWED.

TEMPORARY GRAVEL ACCESS

SCALE: 1"=30'

GRAPHIC SCALE

(IN FEET)
1 inch = 30 ft.

GENERAL NOTES:

1. TRM = TURF REINFORCEMENT MAT.
2. ROCKS ON-SITE MUST BE USED ON-SITE. REMOVE AND STACK EXCESS ROCK IN LOCATIONS DESIGNATED BY THE ENGINEER.
3. NO LOAM, TOP-SOIL, OR WETLAND SOIL IS TO BE IMPORTED FROM OFF-SITE. USE MATERIALS OBTAINED FROM LOCATIONS DESIGNATED BY THE ENGINEER. STOCKPILE REMOVED MATERIALS FOR RE-USE OR SPREAD ON SITE IN DESIGNATED LOCATIONS TO DISPOSE.
4. ALL TEMPORARY ACCESS IMPACTS WITHIN THE RIVERFRONT AREAS SHALL BE RESTORED TO PRE-EXISTING CONDITION.

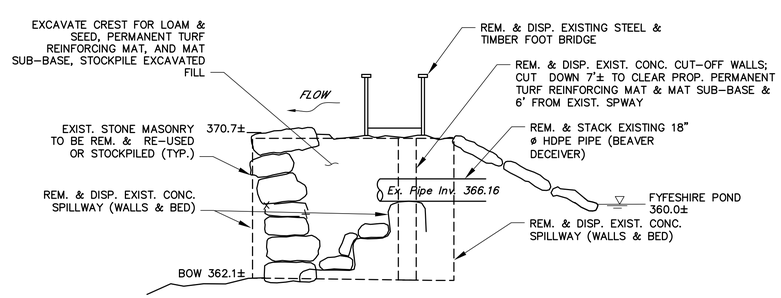

CROSS SECTION THRU SPILLWAY

N.T.S.

Designed By: DWB
Drawn By: DWB
Checked By: SDC
CAD File: SITE PLAN

COMMONWEALTH OF MASSACHUSETTS
KAREN S. FUNG
No. 47166
REGISTERED PROFESSIONAL ENGINEER

Drawing Scale: AS SHOWN

Rev.	Date	Revision	By

Drawing date: 7/11/13

EXISTING CONDITIONS & SITE PREP

PREPARED FOR

TOWN OF BOLTON
CONSERVATION COMMISSION
BOLTON, MASSACHUSETTS

Lenard Engineering, Inc.
Civil, Environmental and Hydrogeological Consultants
2210 Main Street, GLASTONBURY, CT, (860) 659-3100
140 Willow Street, WINSTED, CT, (860) 379-6669
19 Midstate Drive, AUBURN, MA, (508) 721-7600

Drawing #: 2 OF 6

Job #: 13-700

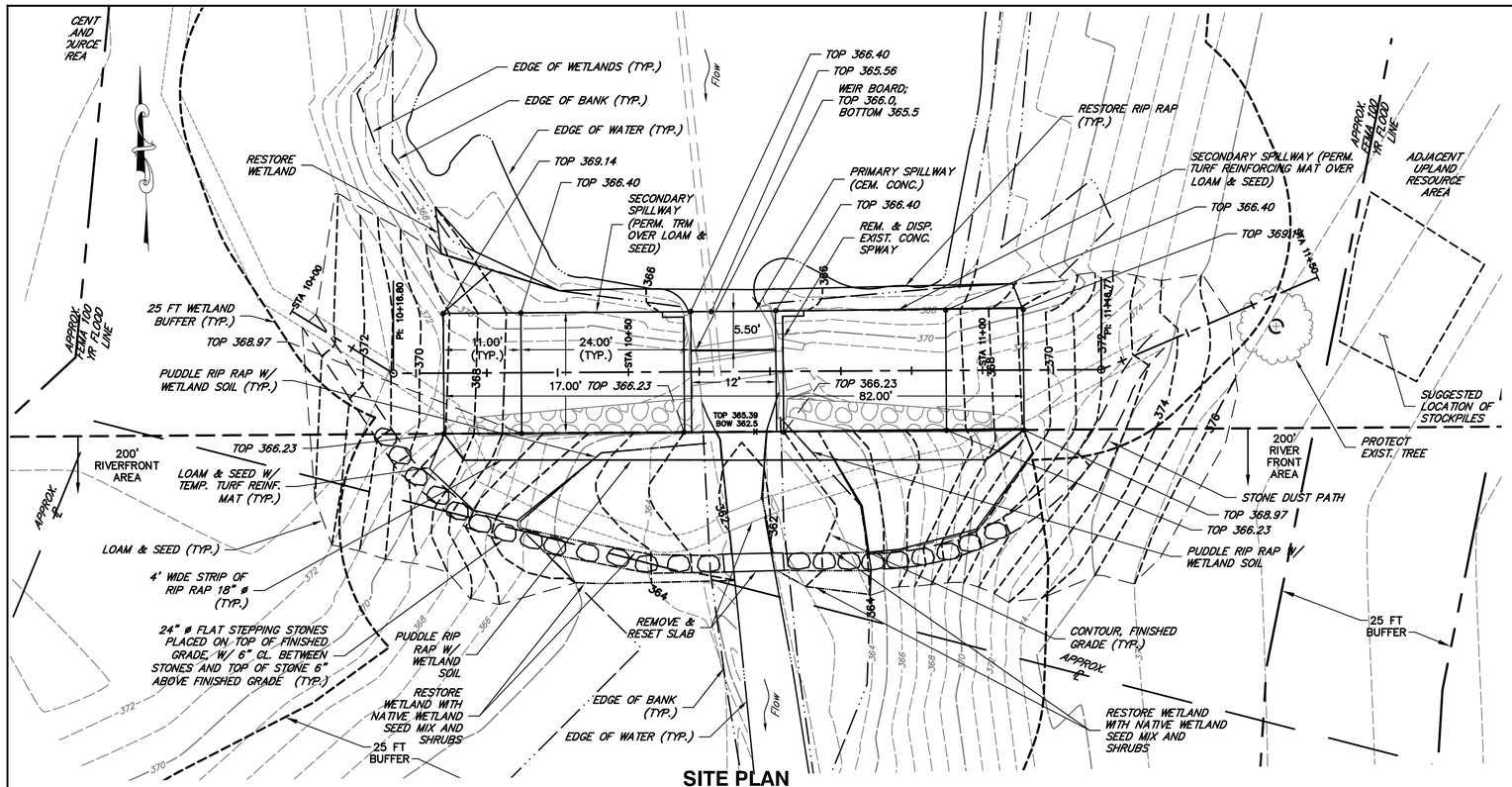

SITE PLAN

SCALE = 1" =10'

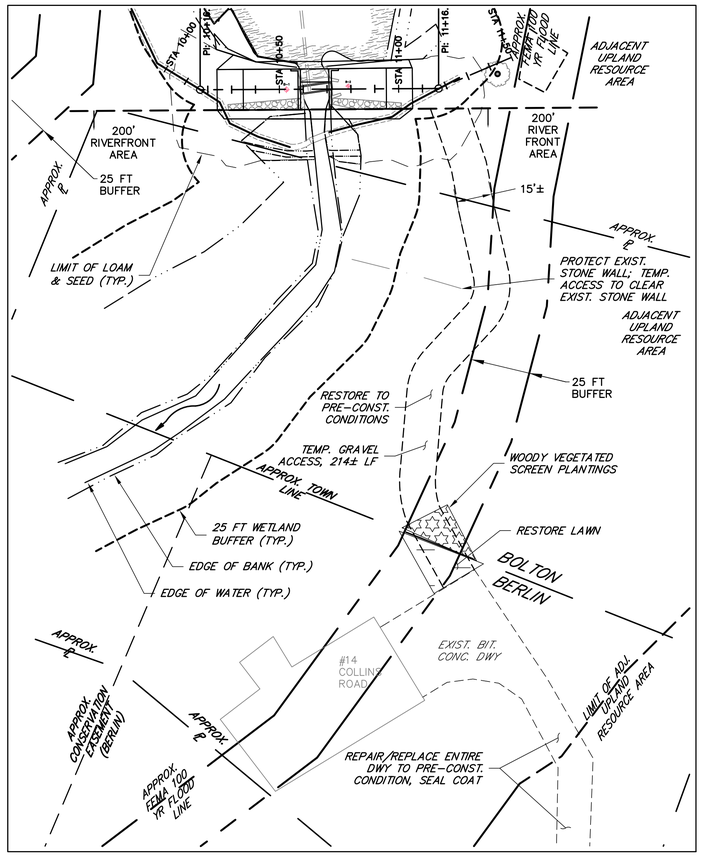

TEMPORARY GRAVEL ACCESS RESTORATION PLAN

SCALE: 1"=30'

GRAPHIC SCALE

30 0 15 30 60 120

(IN FEET)
1 inch = 30 ft.

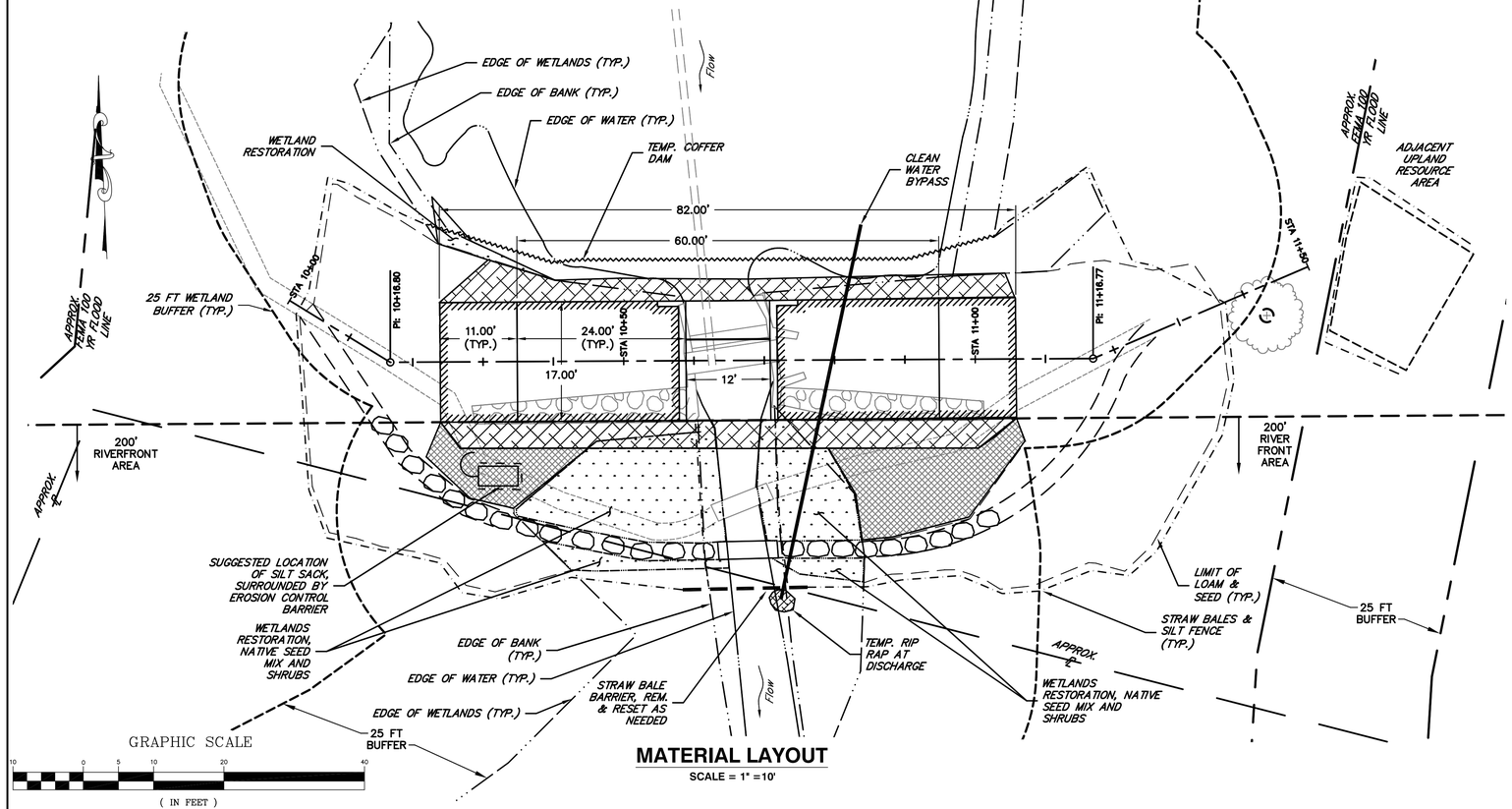

MATERIAL LAYOUT

SCALE = 1" =10'

GRAPHIC SCALE

10 0 5 10 20 40

(IN FEET)
1 inch = 10 ft.

SITE PLAN NOTES:

1. DIFFERENT MATERIALS WITHIN STOCKPILE AREAS SHALL BE SEPARATED FROM ONE ANOTHER WITH STRAW BALES. KEEP HYDRIC SOILS UPHILL OF OTHER MATERIALS.

MATERIAL NOTES:

1. STRAW BALES SHALL COMPLY WITH MASSDOT M.6.04.2. STRAW SHALL CONSIST OF STALKS, OR STEMS AFTER THRESHING.
2. PERMANENT TURF REINFORCEMENT MAT SHALL BE TENSAR P300 OR EQUAL.

GENERAL NOTES:

1. RE-USE STOCKPILED ROCKS FOR RIP RAP. SUPPLEMENT AS NEEDED WITH MHD M2.02.4 MODIFIED RIP RAP.
2. RE-USE STOCKPILED LOAM IN LOAM & SEED AREAS. RE-USE STOCKPILED WETLAND MATERIALS IN AREAS AS SHOWN. SUPPLEMENT LOAM AND WETLAND MATERIALS WITH ON-SITE MATERIALS OR FROM DESIGNATED OFF-SITE STOCKPILES.
3. USE 4000 PSI, ¾", 610 LB CEMENT CONCRETE WITH APPROVED COLORING. SEAL EXPOSED SURFACES.
4. FOR STEEL REINFORCEMENT AND HOOKS, USE GRADE 60, EPOXY COATED STEEL.
5. CRUSHED STONE SHALL HAVE < 5% FINES. GRAVEL BORROW SHALL COMPLY WITH MHD M1.03.0 TYPE B WITH THE EXCEPTION OF HAVING 10% TO 12% FINES.
6. COMPLY WITH MANUFACTURERS RECOMMENDATIONS FOR PREPARATION OF SUB-BASE AND INSTALLATION OF PERMANENT TURF REINFORCING MAT.
7. ALL TEMPORARY ACCESS IMPACTS WITHIN THE RIVERFRONT AREAS SHALL BE RESTORED TO PRE-EXISTING CONDITION.

HYDRAULIC NOTES:

2 YEAR STORM:	INFLOW 76 CFS	OUTFLOW 54 CFS	MAX. ELEV. 366.72 FT
5 YEAR STORM:	INFLOW 172 CFS	OUTFLOW 141 CFS	MAX. ELEV. 367.18 FT
10 YEAR STORM:	INFLOW 230 CFS	OUTFLOW 193 CFS	MAX. ELEV. 367.41 FT
25 YEAR STORM:	INFLOW 319 CFS	OUTFLOW 280 CFS	MAX. ELEV. 367.71 FT
50 YEAR STORM:	INFLOW 428 CFS	OUTFLOW 387 CFS	MAX. ELEV. 368.06 FT
100 YEAR STORM:	INFLOW 515 CFS	OUTFLOW 471 CFS	MAX. ELEV. 368.31 FT

LEGEND:

- WETLAND RESTORATION
- TEMPORARY TURF REINFORCEMENT MAT OVER LOAM & SEED
- RIP RAP
- PERMANENT TURF REINFORCEMENT MAT OVER LOAM & SEED

Designed By: DWB
Drawn By: DWB
Checked By: SDC
CAD File: SITE PLAN

COMMONWEALTH OF MASSACHUSETTS — KAREN S. FUNG — No. 47106 — REGISTERED PROFESSIONAL ENGINEER

Drawing Scale: AS SHOWN

Rev.	Date	Revision	By

Drawing date: 7/11/13

PROPOSED CONDITIONS & MATERIAL LAYOUT

PREPARED FOR

TOWN OF BOLTON
CONSERVATION COMMISSION
BOLTON, MASSACHUSETTS

Lenard Engineering, Inc.
Civil, Environmental and Hydrogeological Consultants
2210 Main Street, GLASTONBURY, CT (860) 659-3100
140 Willow Street, WINSTED, CT (860) 379-6669
19 Millstate Drive, AUBURN, MA (508) 721-7600

Drawing #: 3 OF 6

Job #: 13-700

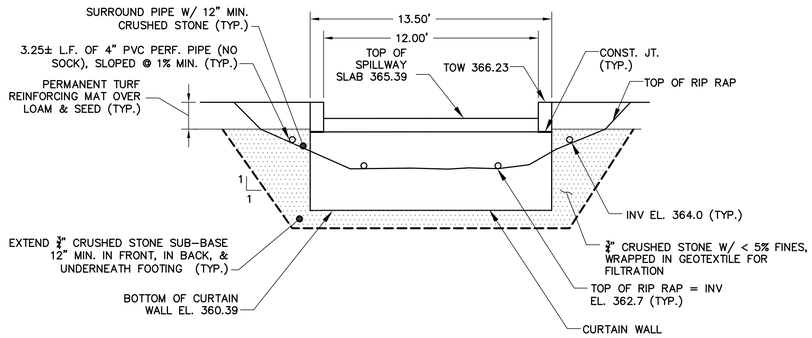

SPILLWAY ELEVATION - DOWNSTREAM EDGE

SCALE: 1"=4'

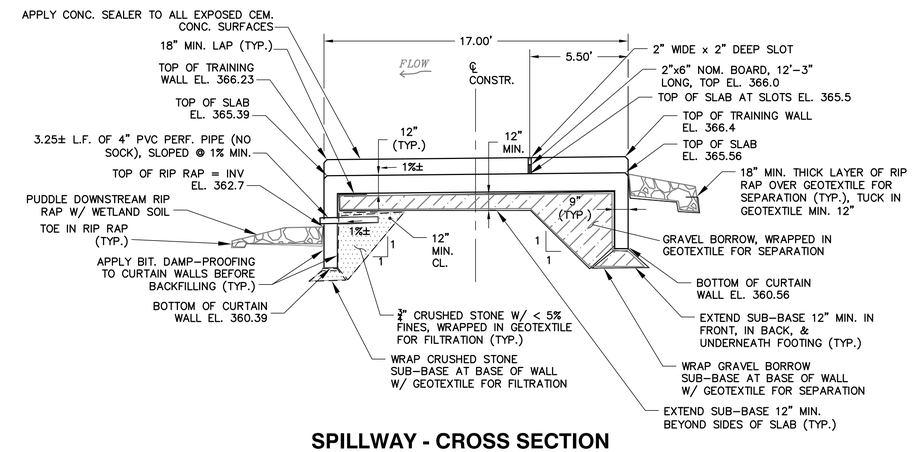

SPILLWAY - CROSS SECTION

SCALE: 1"=4'

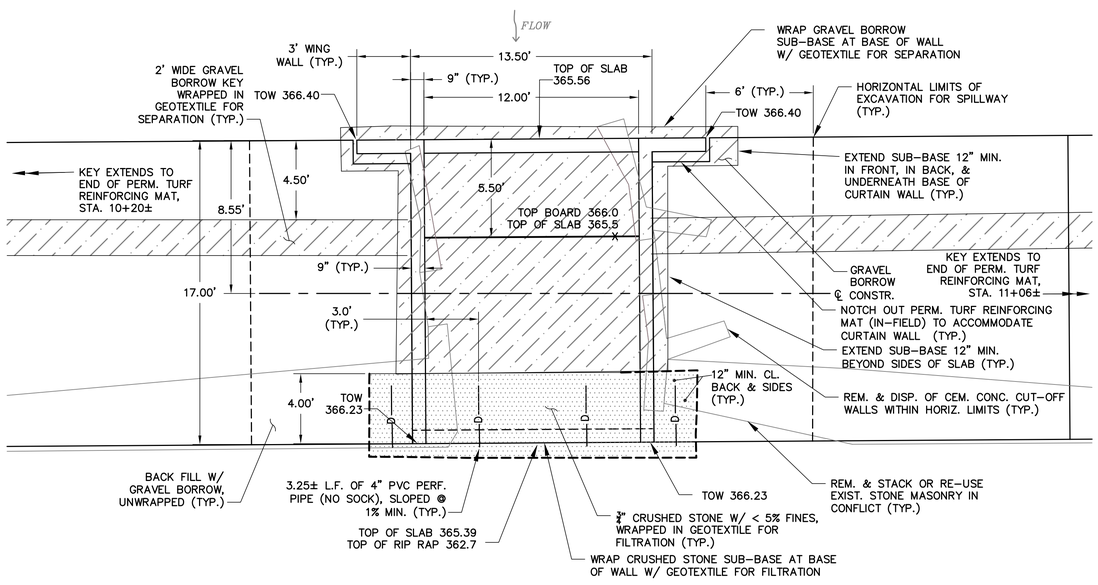

SPILLWAY - PLAN BELOW TURF REINFORCING MAT

SCALE: 1"=4'

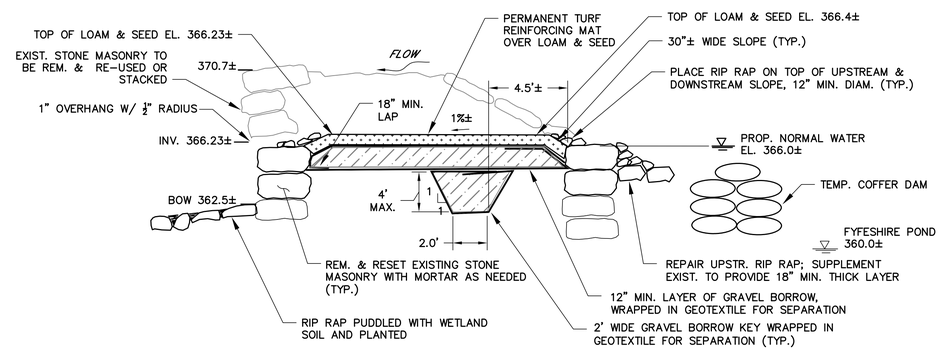

EMBANKMENT - CROSS SECTION

SCALE: 1"=4'

GENERAL NOTES:

1. RE-USE STOCKPILED ROCKS FOR RIP RAP. SUPPLEMENT AS NEEDED WITH MHD M2.02.4 MODIFIED RIP RAP.
2. RE-USE STOCKPILED LOAM IN LOAM & SEED AREAS. RE-USE STOCKPILED WETLAND MATERIALS IN AREAS AS SHOWN. SUPPLEMENT LOAM AND WETLAND MATERIALS WITH ON-SITE MATERIALS OR FROM DESIGNATED OFF-SITE STOCKPILES.
3. USE 4000 PSI, ¾", 610 LB CEMENT CONCRETE WITH APPROVED COLORING. SEAL EXPOSED SURFACES.
4. FOR STEEL REINFORCEMENT AND HOOKS, USE GRADE 60, EPOXY COATED STEEL.
5. CRUSHED STONE SHALL HAVE < 5% FINES. GRAVEL BORROW SHALL COMPLY WITH MHD M1.03.0 TYPE B WITH THE EXCEPTION OF HAVING 10% TO 12% FINES.
6. COMPLY WITH MANUFACTURERS RECOMMENDATIONS FOR PREPARATION OF SUB-BASE AND INSTALLATION OF PERMANENT TURF REINFORCING MAT.

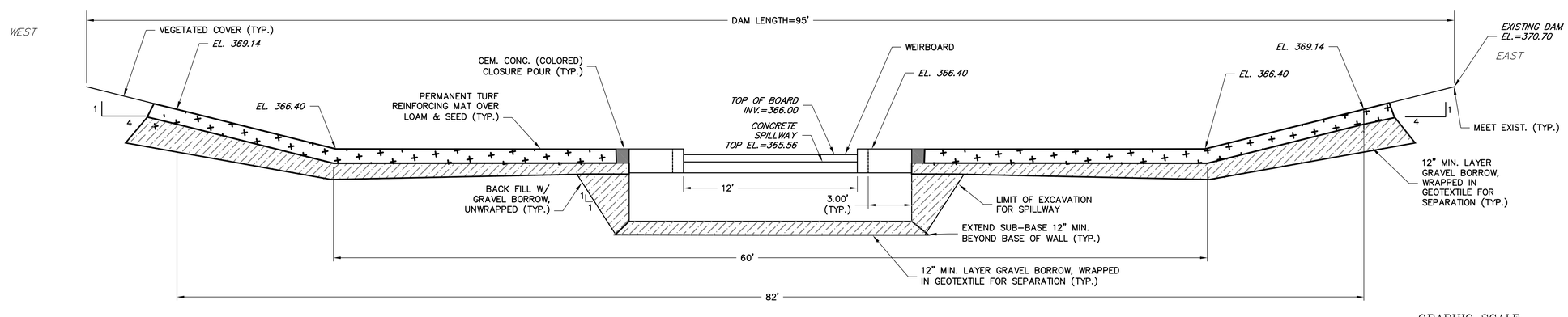

NOTES:

1. ELEVATIONS SHOWN ARE FOR INLETS. SEE PLAN FOR DISCHARGE ELEVATIONS.

LONGITUDINAL SECTION - UPSTREAM SIDE

SCALE: 1"=4'

GRAPHIC SCALE

4 0 2 4 8 16

(IN FEET)
1 inch = 4 ft.

Designed By: DWB
Drawn By: DWB
Checked By: SDC
CAD File: SITE PLAN

COMMONWEALTH OF MASSACHUSETTS — KAREN S. FUNG — No. 47106 — REGISTERED PROFESSIONAL ENGINEER

7/11/13

Drawing Scale: AS SHOWN

Rev.	Date	Revision	By

Drawing date: 7/11/13

PROPOSED SPILLWAY

PREPARED FOR

TOWN OF BOLTON
CONSERVATION COMMISSION
BOLTON, MASSACHUSETTS

Lenard Engineering, Inc.
Civil, Environmental and Hydrogeological Consultants
2210 Main Street, GLASTONBURY, CT (860) 659-3100
140 Willow Street, WINSTED, CT (860) 379-6669
19 Midstate Drive, AUBURN, MA (508) 721-7600

Drawing #: 4 OF 6

Job #: 13-700

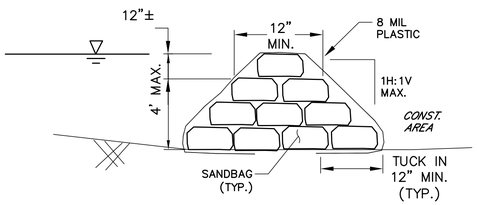

SAMPLE COFFERDAM SECTION

N.T.S.

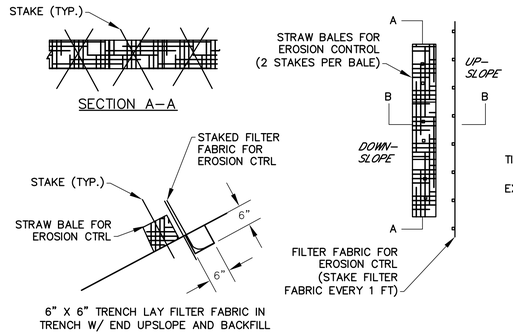

STRAW BALE AND SILT FENCE FOR EROSION CONTROL NOT TO SCALE

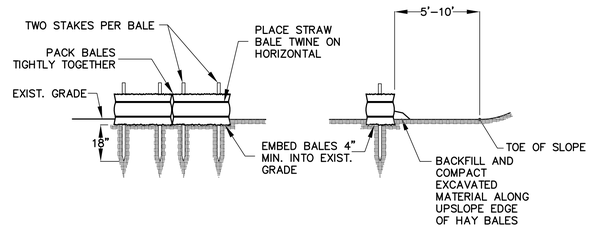

HAY BALE BARRIER

N.T.S.

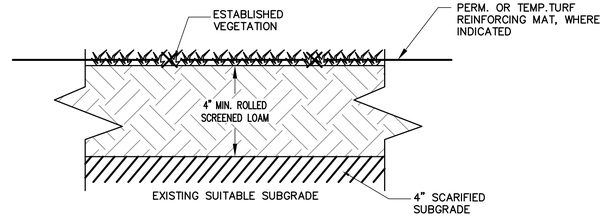

NOTES:

1. NO LOAM IS TO BE IMPORTED FROM OFF–SITE. USE MATERIALS OBTAINED FROM LOCATIONS DESIGNATED BY THE ENGINEER OR RE–USE STOCKPILED MATERIALS.
2. ALL DISTURBED AREAS TO BE LOAMED WITH A MINIMUM OF 4–INCHES OF SCREENED LOAM IN ACCORDANCE WITH MASSACHUSETTS HIGHWAY DEPARTMENT (MHD) STANDARD SPECIFICATIONS FOR HIGHWAYS AND BRIDGES SECTION 751.
3. LOAM MATERIAL SHALL MEET MHD M1.05.0. MATERIAL SOURCE AND IN–PLACE LABORATORY ANALYTICAL TESTING OF LOAM FOR COMPLIANCE WITH M1.05.0 MAY BE REQUIRED BY THE TOWN PRIOR TO PLACEMENT AND FINAL ACCEPTANCE.
4. AFTER PLACEMENT, ROLLING AND RAKING OF THE SCREENED TOPSOIL, AND SEEDING OF THE TOPSOIL SHALL BE IN ACCORDANCE WITH MHD STANDARD SPECIFICATIONS FOR HIGHWAYS AND BRIDGES SECTION 765.
5. ALL DISTURBED UPLAND AREAS SHALL BE SEEDED WITH "NEW ENGLAND EROSION CONTROL/RESTORATION MIX FOR DRY SITES" FROM NEW ENGLAND WETLAND PLANTS, INC. OR APPROVED ALTERNATIVE. SEEDING WILL BE IN ACCORDANCE WITH THE SUPPLIER'S RECOMMENDED SEEDING RATE. DISTURBED WETLAND AREAS SHALL BE SEEDED WITH THE NEW ENGLAND WETMIX FROM NEW ENGLAND WETLAND PLANTS, INC. OR APPROVED ALTERNATIVE. SEEDING WILL BE IN ACCORDANCE WITH THE SUPPLIERS RECOMMENDED SEEDING RATE.
6. SEEDS TO BE APPLIED BY HYDROSEEDING, MECHANICAL SPREADING, OR BY HAND. SEEDED AREAS SHALL BE LIGHTLY RAKED OR ROLLED TO PROVIDE PROPER SOIL–SEED CONTACT.
7. THE APPLICATION RATE SHALL BE TWO POUNDS PER ONE THOUSAND SQUARE FEET. THE SEED SHALL HAVE A WEED SEED CONTENT OF LESS THAN 1% BY WEIGHT.
8. OTHER SEED MIXES MAY BE UTILIZED SUBJECT TO PRIOR APPROVAL BY THE ENGINEER AND OWNER, AND SUBJECT TO ANY CONDITIONS OF THE VARIOUS ENVIRONMENTAL PERMITS.
9. THE SEED SHALL BE FURNISHED AND DELIVERED PREMIXED IN THE PROPORTIONS SPECIFIED ABOVE. ALL SEED SHALL COMPLY WITH APPLICABLE STATE AND FEDERAL SEED LAWS. A GROWER'S CERTIFICATE OF COMPLIANCE WITH THE SPECIFICATIONS SHALL BE SUBMITTED BY THE GROWER WITH THE SHIPMENT OF THE SEED. THE CERTIFICATE SHALL INCLUDE THE GUARANTEED PERCENTAGE OF PURITY, WEED CONTENT AND GERMINATION OF THE SEED, AND ALSO THE NET WEIGHT AND DATE OF SHIPMENT. NO SEED SHALL BE SOWN UNTIL THE CONTRACTOR HAS SUBMITTED THE CERTIFICATE TO THE ENGINEER, IF AVAILABLE.
10. WHERE INDICATED, DISTURBED WETLAND AREAS SHALL BE PLANTED WITH 3 FT TO 4 FT HIGH NORTHERN ARROWWOODS (Viburnum dentatum) OR APPROVED ALTERNATIVE, FOUR TO FIVE FEET ON–CENTER, TO RESTORE NATIVE WETLAND SHRUB VEGETATION.
11. WHERE INDICATED, NATIVE SHRUBS AND TREES SHALL BE PLACED IN TEMPORARILY DISTURBED UPLAND AREAS. TREES AND SHRUBS SHALL NOT BE PLANTED ON THE DAM. TREES AND SHRUBS FOR PLANTING SHALL INCLUDE THE FOLLOWING SPECIES OR COMPARABLE:

Scientific Name	Size	Spacing	Type
Hamamelis virginiana	2-3 feet	3-5 feet on center	Shrub
Vaccinium corybosum	2-3 feet	3-5 feet on center	Shrub
Betula populifolia	3-4 feet	3-5 feet on center	Tree
Acer rubrum	3-4 feet	3-5 feet on center	Tree

12. WHERE INDICATED, INSTALL PERMENENT OR TEMPORARY TURF REINFORCEMENT MAT. COMPLY WITH MANUFACTURER'S RECOMMENDED INSTALLATION METHODS.

LOAM & SEED

N.T.S.

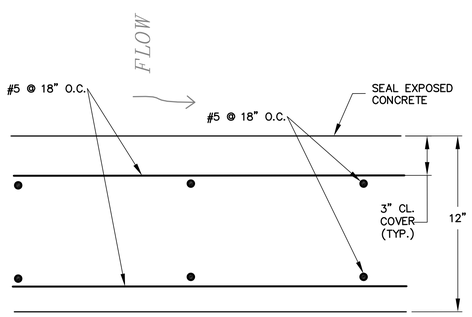

NOTES:

1. TRAINING WALLS NOT SHOWN FOR CLARITY.
2. BROOM FINISH TOP SURFACE OF SPILLWAY.

SPILLWAY SLAB - CROSS SECTION

N.T.S.

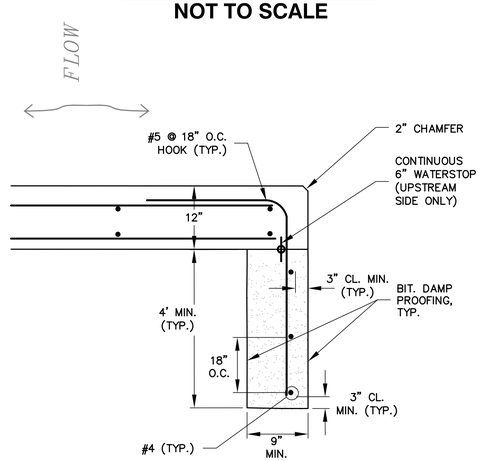

NOTES:

1. REBAR SIZE AND PATTERN FOR CURTAIN WALL DIRECTLY UNDER SPILLWAY IS SHOWN. FOR REBAR EXTENDING UP INTO WING WALL FROM CURTAIN WALL, SEE WING WALL DETAIL.
2. TRAINING WALLS ON TOP OF SPILLWAY NOT SHOWN FOR CLARITY.

CURTAIN WALL - CROSS SECTION

N.T.S.

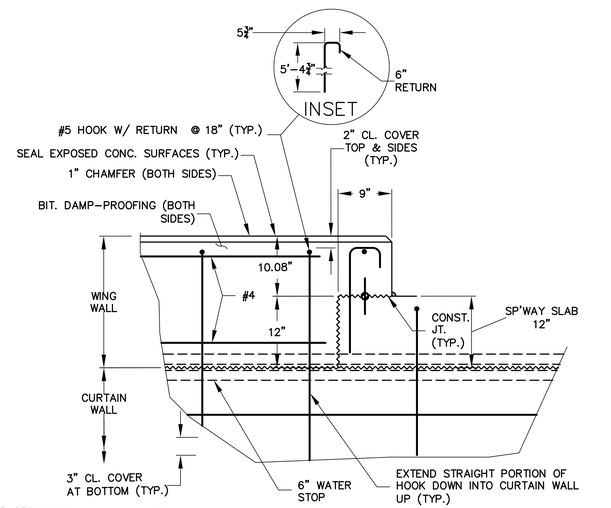

NOTES:

1. FOR REBAR SIZE AND PATTERN FOR CURTAIN WALL DIRECTLY UNDER SPILLWAY, SEE CURTAIN WALL DETAIL.
2. DIMENSIONS OF REBAR HOOK FROM WINGWALL INTO CURTAIN WALL IS FOR OUT–TO–OUT. IN ALL CASES PROVIDE CLEARANCES AS SHOWN.

WING WALL - ELEVATION

N.T.S.

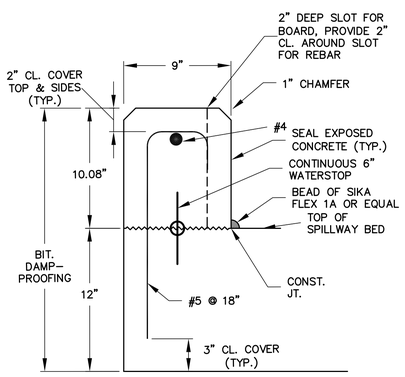

NOTES:

1. REBAR FOR SPILLWAY SLAB NOT SHOWN FOR CLARITY.

TRAINING WALL - CROSS SECTION

N.T.S.

PERMANENT TURF REINFORCEMENT MAT (TRM) NOTES:

1. PERMANENT TRM SPECIFICATIONS SHALL MEET OR EXCEED A VELOCITY OF 2.3 FPS AND A SHEAR STRESS OF 2.74 PSF.
2. IN LOOSE SOIL CONDITIONS, THE USE OF STAPLE OR STAKE LENGTHS GREATER THAN 6" (15 CM) MAY BE NECESSARY TO PROPERLY ANCHOR THE FABRIC.
3. ADJUST HORIZONTAL SPACING TO PROVIDE STAPLE CHECK SLOTS.

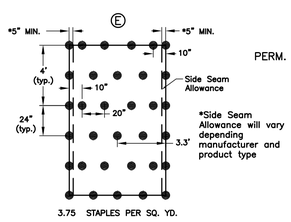

STAPLE PATTERN

N.T.S.

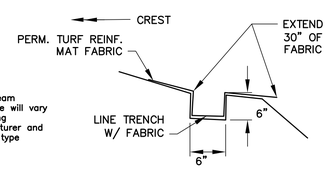

INITIAL ANCHOR TRENCH (UPSTREAM TOE)

N.T.S.

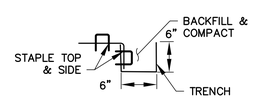

ANCHOR TRENCH (LONG EDGE & DOWNSTREAM TOE)

N.T.S.

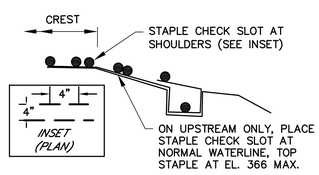

STAPLE CHECK SLOT

N.T.S.

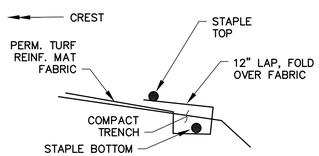

COMPLETED ANCHOR TRENCH (UPSTREAM TOE)

N.T.S.

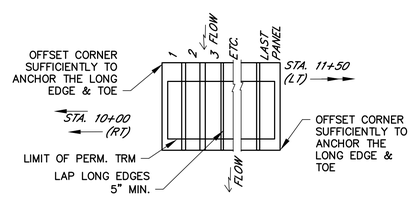

PANEL PLACEMENT

N.T.S.

PERMANENT TURF REINFORCEMENT MAT

INSTALLATION OF PERMANENT TURF REINFORCEMENT MAT:

1. PREPARE SOIL BEFORE INSTALLING PERMANENT TURF REINFORCEMENT MAT (TRM), INCLUDING ANY NECESSARY APPLICATION OF SOD, LIME, FERTILIZER, AND SEED. NOTE: WHEN USING CELL–O–SEED DO NOT SEED PREPARED AREA. CELL–O–SEED MUST BE INSTALLED WITH PAPER SIDE DOWN.
2. BEGIN AT THE THE UPSTREAM TOE AND ROLL THE TRM UP AND OVER THE CREST AND DOWN TO THE TOE OF THE DOWNSTREAM SLOPE. PANELS OF TRM WILL BE LAID RIGHT TO LEFT.
3. LAY THE UPSTREAM CORNER OF TRM 6 INCHES TO THE RIGHT AND 30 INCHES UPSTREAM OF THE PERMANENT TRM LOCATION SHOWN ON THE PLAN. ANCHOR THE UPSTREAM TOE. THE SHORT DOWNSTREAM EDGE, THE LONG EXTERIOR EDGE OF THE FIRST PANEL, AND HE LONG EXTERIOR EDGE OF THE LAST PANEL WILL ALSO HAVE TO BE ANCHORED.

4. ANCHORING AT THE UPSTREAM TOE:
   - 4.1. DIG A TRENCH 6" (15 CM) DEEP X 6" (15 CM) WIDE ALL ALONG THE TOE.
   - 4.2. EXTEND 30 INCHES OF TRM.
   - 4.3. LINE THE TRENCH WITH THE TRM. THE EXCESS WILL HANG OUT THE TRENCH AWAY FROM THE CREST.
   - 4.4. ANCHOR THE TRM WITH A ROW OF STAPLES/STAKES APPROXIMATELY 12" (30 CM) APART IN THE BOTTOM OF THE TRENCH.
   - 4.5. BACKFILL AND COMPACT THE TRENCH AFTER STAPLING. APPLY SEED TO COMPACTED SOIL.
   - 4.6. FOLD BACK OVER THE EXCESS.
   - 4.7. SECURE FABRIC OVER COMPACTED SOIL WITH A ROW OF STAPLES/STAKES SPACED APPROXIMATELY 12" (30 CM) ACROSS THE WIDTH OF THE FABRIC.
   - 4.8. THE LONG EXTERIOR EDGE OF THE FABRIC WILL ALSO HAVE TO BE ANCHORED.

5. ANCHORING AT THE LONG EDGE AND DOWNSTREAM TOE:
   - 5.1. DIG A 6" X 6" TRENCH.
   - 5.2. FOLD DOWN 6 INCHES OF TRM AGAINST THE SIDE OF THE TRENCH.
   - 5.3. STAPLE THE SIDE OF THE TRM IN THE TRENCH AND THE LONG EDGE ON THE TOP.
   - 5.4. BACKFILL AND COMPACT.

6. ROLL THE TRM UP AND OVER THE CREST, STAPLING PER THE PATTERN INDICATED.
7. ROLL THE TRM DOWN FROM THE CREST TO THE DOWNSTREAM TOE.
8. ANCHOR THE DOWNSTREAM TOE (SAME METHOD AS THE LONG EDGE).
10. ADJACENT PANELS MUST BE OVERLAPPED APPROXIMATELY 5" MINIMUM (12.5 CM) AND STAPLED.
11. REPEAT THE PROCESS WITH THE NEXT PANEL.
12. PROVIDE A STAPLE CHECK SLOT ON THE UPSTREAM SHOULDER, THE DOWNSTREAM SHOILDER AND THE NORMAL WATERLINE. USE A DOUBLE ROW OF STAPLES STAGGERED 4" (10 CM) APART AND 4" (10 CM) ON CENTER.

Designed By: DWB
Drawn By: DWB
Checked By: SDC
CAD File: SITE PLAN

COMMONWEALTH OF MASSACHUSETTS — KAREN S. FUNG — No. 47106 — REGISTERED PROFESSIONAL ENGINEER

Drawing Scale: AS SHOWN

Rev.	Date	Revision	By

Drawing date: 7/11/13

DETAILS 1

PREPARED FOR
TOWN OF BOLTON
CONSERVATION COMMISSION
BOLTON, MASSACHUSETTS

Lenard Engineering, Inc.
Civil, Environmental and Hydrogeological Consultants
2210 Main Street, GLASTONBURY, CT, (860) 659–3100
140 Willow Street, WINSTED, CT, (860) 379–6669
19 Midstate Drive, AUBURN, MA, (508) 721–7600

Drawing #: 5 OF 6

Job #: 13–700

GENERAL NOTES:

1. RE-USE STOCKPILED ROCKS FOR RIP RAP. SUPPLEMENT AS NEEDED WITH MHD M2.02.4 MODIFIED RIP RAP.
2. RE-USE STOCKPILED LOAM IN LOAM & SEED AREAS. RE-USE STOCKPILED WETLAND MATERIALS IN AREAS AS SHOWN. SUPPLEMENT LOAM AND WETLAND MATERIALS WITH ON-SITE MATERIALS OR FROM DESIGNATED OFF-SITE STOCKPILES.
3. USE 4000 PSI, 3/4", 610 LB CEMENT CONCRETE WITH APPROVED COLORING. SEAL EXPOSED SURFACES.
4. FOR STEEL REINFORCEMENT AND HOOKS, USE GRADE 60, EPOXY COATED STEEL.
5. CRUSHED STONE SHALL HAVE < 5% FINES. GRAVEL BORROW SHALL COMPLY WITH MHD M1.03.0 TYPE B WITH THE EXCEPTION OF HAVING 10% TO 12% FINES.
6. COMPLY WITH MANUFACTURERS RECOMMENDATIONS FOR PREPARATION OF SUB-BASE AND INSTALLATION OF PERMANENT TURF REINFORCING MAT.
7. ALL TEMPORARY ACCESS IMPACTS WITHIN THE RIVERFRONT AREAS SHALL BE RESTORED TO PRE-EXISTING CONDITION.

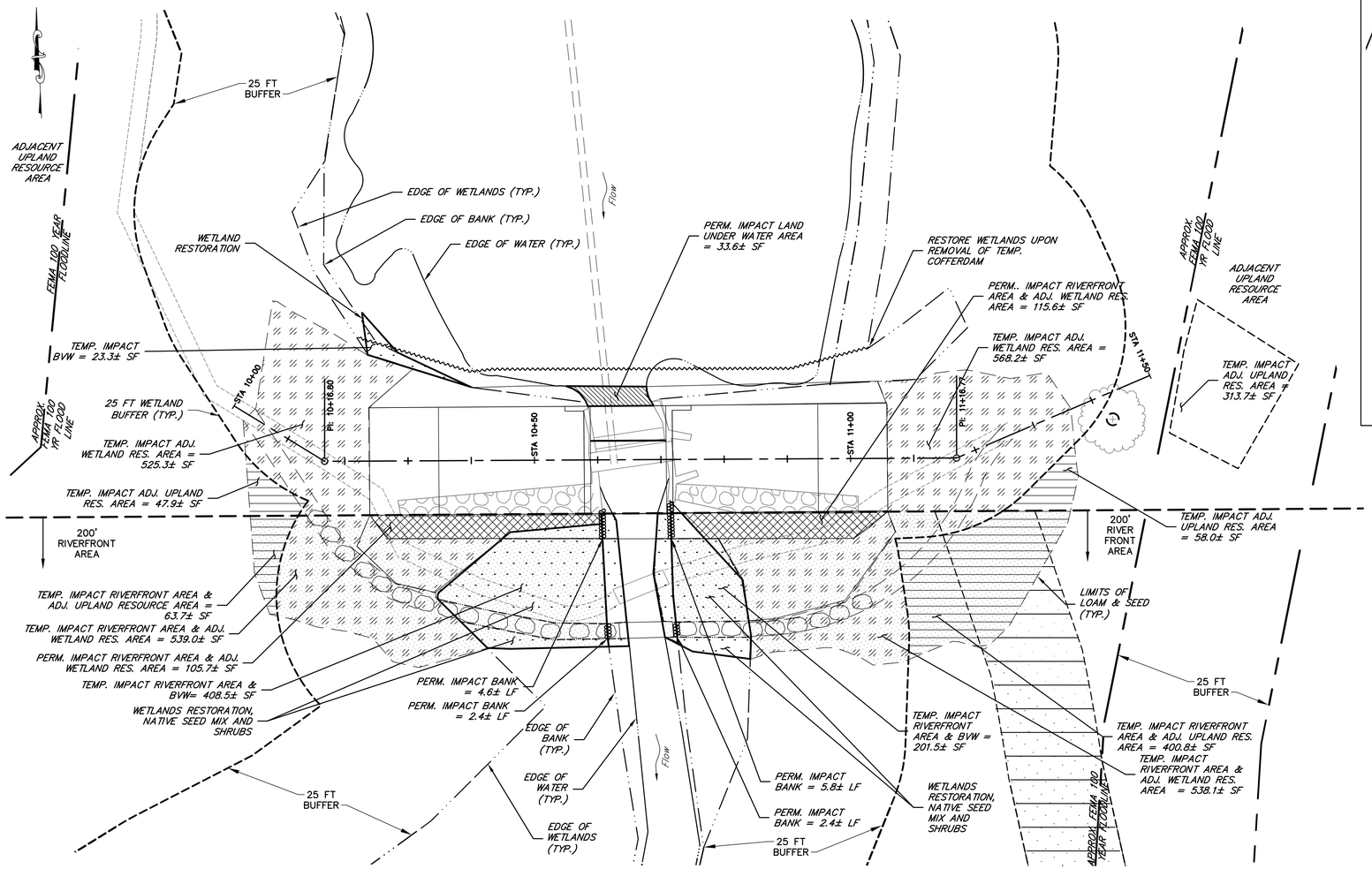

GRAPHIC SCALE

10 0 5 10 20 40

(IN FEET)
1 inch = 10 ft.

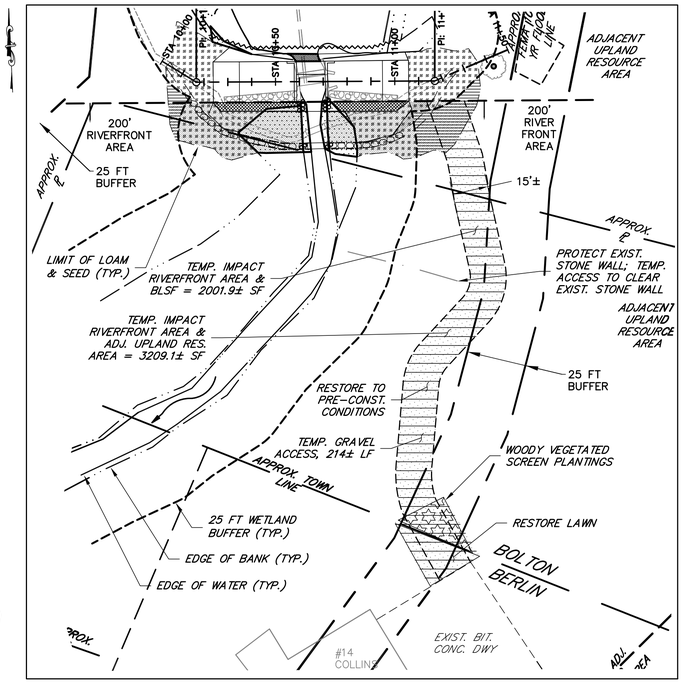

TEMPORARY GRAVEL ACCESS

SCALE: 1"=30'

GRAPHIC SCALE

30 0 15 30 60 120

(IN FEET)
1 inch = 30 ft.

LEGEND:

- PERMANENT IMPACT LAND UNDER WATER
- PERMANENT IMPACT BANK
- PERMANENT IMPACT RIVERFRONT AREA & ADJACENT WETLAND RESOURCE AREA (AWRA)
- TEMPORARY IMPACT BVW / WETLAND RESTORATION
- TEMPORARY IMPACT RIVERFRONT AREA
- TEMPORARY IMPACT ADJACENT WETLAND RESOURCE AREA (AWRA)
- TEMPORARY IMPACT ADJACENT UPLAND RESOURCE AREA (AURA)

DISTURBANCE AREAS

	PERMANENT	TEMPORARY
LAND UNDER WATER (SF)	34	0
BANK (LF)	15	0
BORDERING VEGETATED WETLAND BVW (SF)	0	633
RIVERFRONT AREA (SF)	221	5361
ADJACENT WETLAND RESOURCE AREA (SF)	221	2171
ADJACENT UPLAND RESOURCE AREA (SF)	0	4093
BORDERING LAND SUBJECT TO FLOODING	221	5690

Designed By: DWB
Drawn By: DWB
Checked By: SDC
CAD File: SITE PLAN

COMMONWEALTH OF MASSACHUSETTS
KAREN S. FUNG
No. 47005
REGISTERED PROFESSIONAL ENGINEER

Drawing Scale: AS SHOWN

Rev.	Date	Revision	By

Drawing date: 7/11/13

WETLAND IMPACTS & REPLICATION

PREPARED FOR

TOWN OF BOLTON
CONSERVATION COMMISSION
BOLTON, MASSACHUSETTS

Lenard Engineering, Inc.
Civil, Environmental and Hydrogeological Consultants
2210 Main Street, GLASTONBURY, CT, (860) 659-3100
140 Willow Street, WINSTED, CT, (860) 379-6669
19 Midstate Drive, AUBURN, MA, (508) 721-7600

Drawing #: WET1

Job #: 13-700