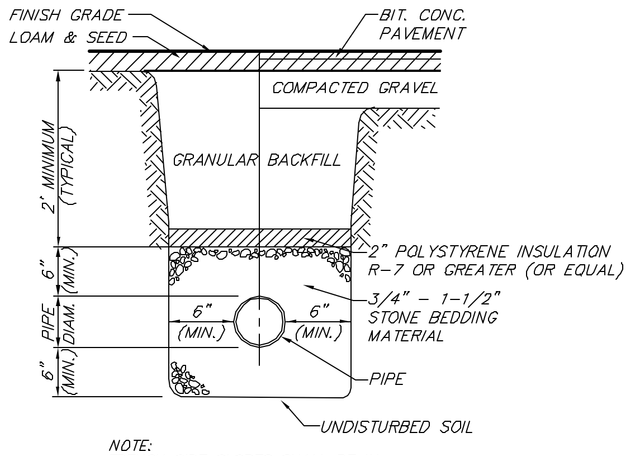

NOTE:
TRENCH SIDE SLOPES SHALL BE IN ACCORDANCE WITH OSHA REQUIREMENTS.

PIPE INSULATION

NOT TO SCALE

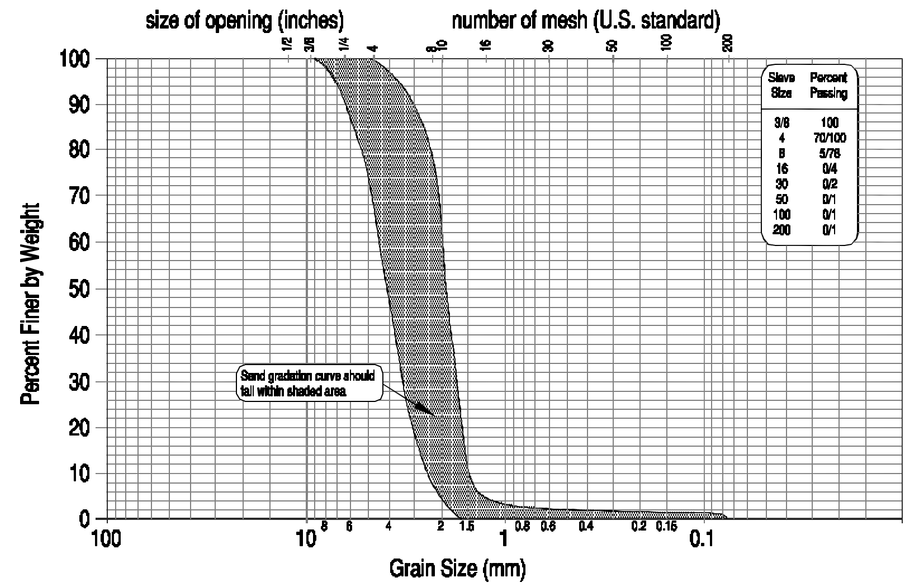

1. FILTER MEDIA TO BE USED SHALL MEET THE FOLLOWING SPECIFICATIONS:
   A. THE EFFECTIVE PARTICLE SIZE SHALL BE 1 MM TO 2 MM.
   B. THE UNIFORMITY COEFICIENT SHALL BE LESS THAN OR EQUAL TO 3.0.
   C. ALL FILTER MEDIA SHALL BE DOUBLE WASHED ANDE LESS THAN 1 PERECENT (BY WEIGHT) SHALL PASS THE #200 SIEVE.
2. EACH LOAD BROUGHT TO THE SITE SHALL BE TESTED BY A CERTIFIED SOILS TESTING LABORATORY USING STANDARD TESTING METHODS. EACH SAMPLE SHALL BE REVIEWED AND APPROVED BY THE ENGINEER PRIOR TO INSTALLATION.
3. FILTER MEDIA SHALL BE WETTED WHEN PLACED.
4. MEDIA NOT MEETING THE ABOVE SPECIFICATIONS SHALL BE REJECTED AND NOT USED FOR THE SAND FILTER MEDIA.

SAND GRADATION RANGE FOR RECIRCULATING SAND FILTER MEDIA (LOADING UP TO 5 GPD/SQ.FT.)

NOT TO SCALE

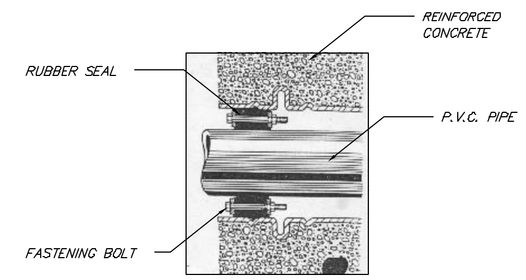

LINK SEAL

NOT TO SCALE

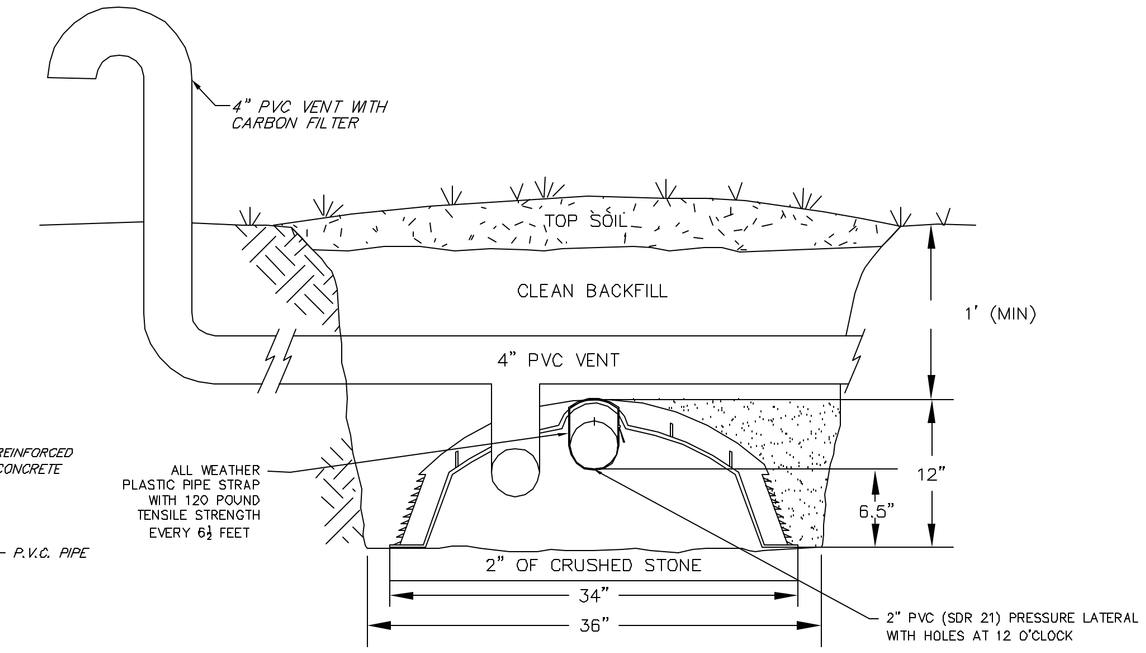

STANDARD TRENCH

NOT TO SCALE

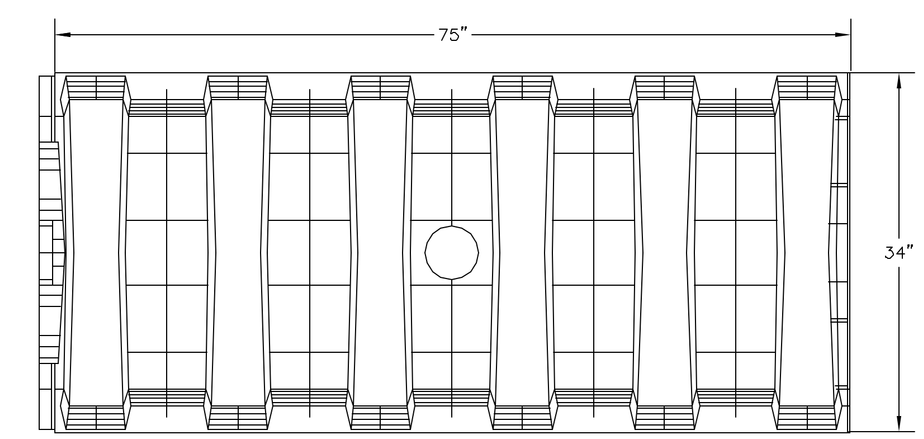

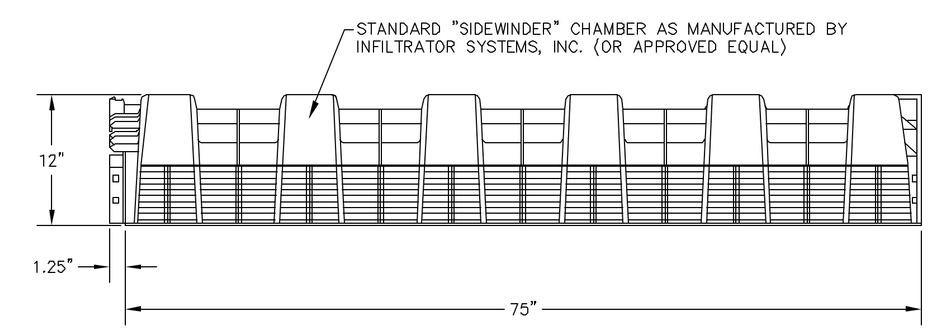

INFILTRATOR CHAMBER

NOT TO SCALE

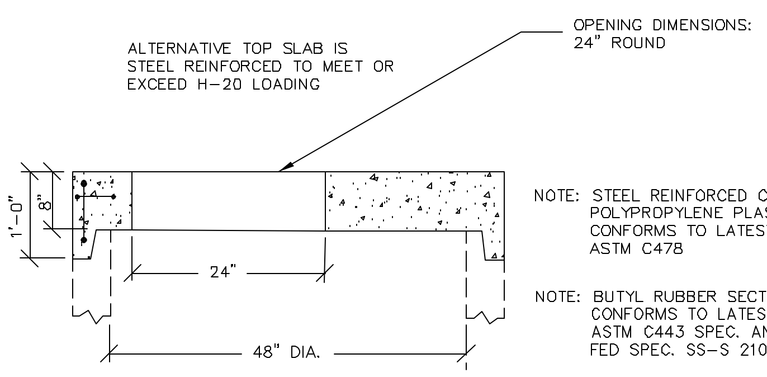

NOTE: STEEL REINFORCED COPOLYMER POLYPROPYLENE PLASTIC STEP CONFORMS TO LATEST ASTM C478

NOTE: BUTYL RUBBER SECTION JOINT CONFORMS TO LATEST ASTM C443 SPEC. AND FED SPEC. SS-S 210A

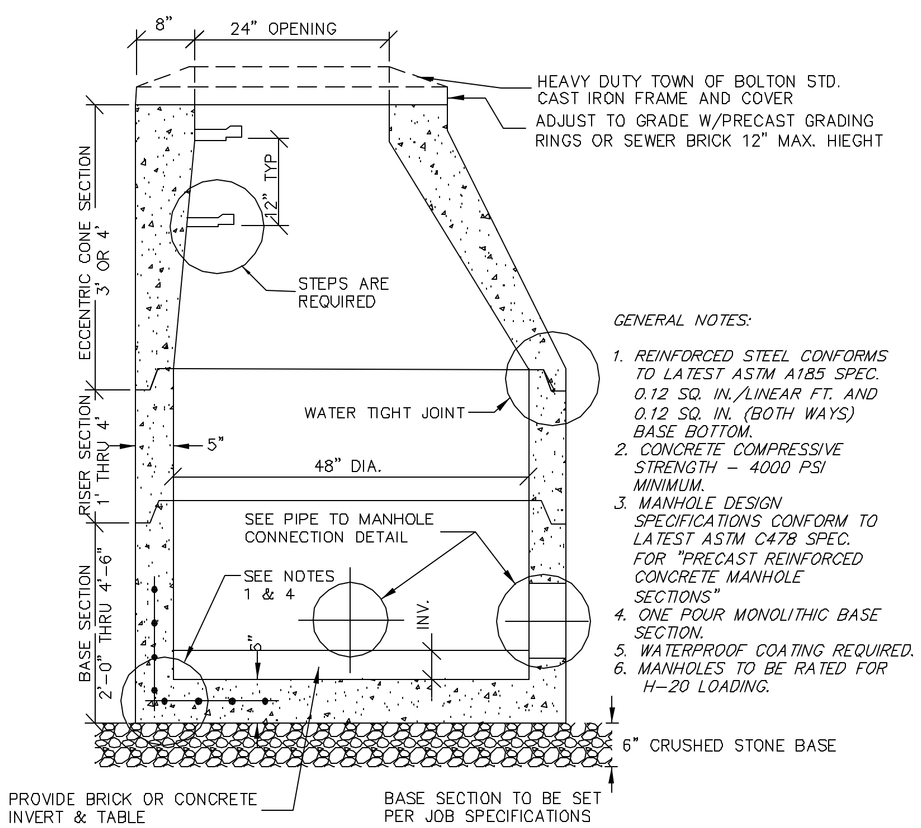

GENERAL NOTES:

1. REINFORCED STEEL CONFORMS TO LATEST ASTM A185 SPEC. 0.12 SQ. IN./LINEAR FT. AND 0.12 SQ. IN. (BOTH WAYS) BASE BOTTOM.
2. CONCRETE COMPRESSIVE STRENGTH - 4000 PSI MINIMUM.
3. MANHOLE DESIGN SPECIFICATIONS CONFORM TO LATEST ASTM C478 SPEC. FOR "PRECAST REINFORCED CONCRETE MANHOLE SECTIONS"
4. ONE POUR MONOLITHIC BASE SECTION.
5. WATERPROOF COATING REQUIRED.
6. MANHOLES TO BE RATED FOR H-20 LOADING.

4' Ø SANITARY MANHOLE

NOT TO SCALE

PIPE TO MANHOLE CONNECTION DETAIL

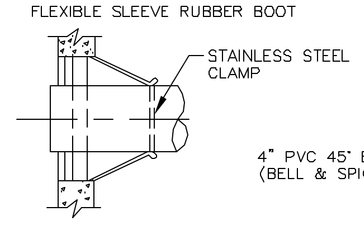

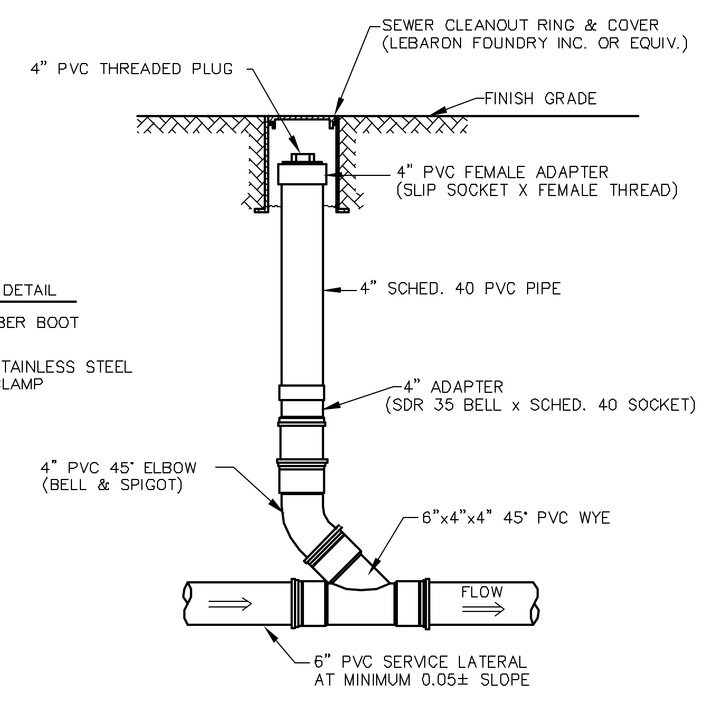

SEWER CLEANOUT

NOT TO SCALE

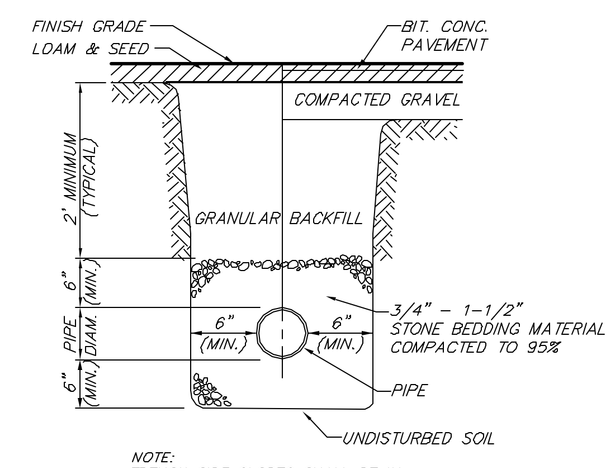

NOTE:
TRENCH SIDE SLOPES SHALL BE IN ACCORDANCE WITH OSHA REQUIREMENTS.

PIPE TRENCH

NOT TO SCALE

DETAIL SHEET

50 MECHANIC STREET

BOLTON, MASSACHUSETTS

PREPARED FOR: TOWN OF BOLTON
P.O. 27B
BOLTON, MA 01740

TEL: (978) 779-2297
DATE: JULY 16, 2004

NO.	DATE	DESCRIPTION	BY		
				DESIGN BY:	BJD FEB 04
				DRAWN BY:	BJD FEB 04
1.	1/13/05	DEP COMMENTS	BJD		
1.	10/26/04	DEP COMMENTS	EAW	CHECKED BY:	CDM 3/31/04

DUCHARME & WHEELER, INC.

1092 MAIN STREET, P.O.BOX 428, BOLTON, MA., 01740

COPYRIGHT DUCHARME & WHEELER, INC. 2004