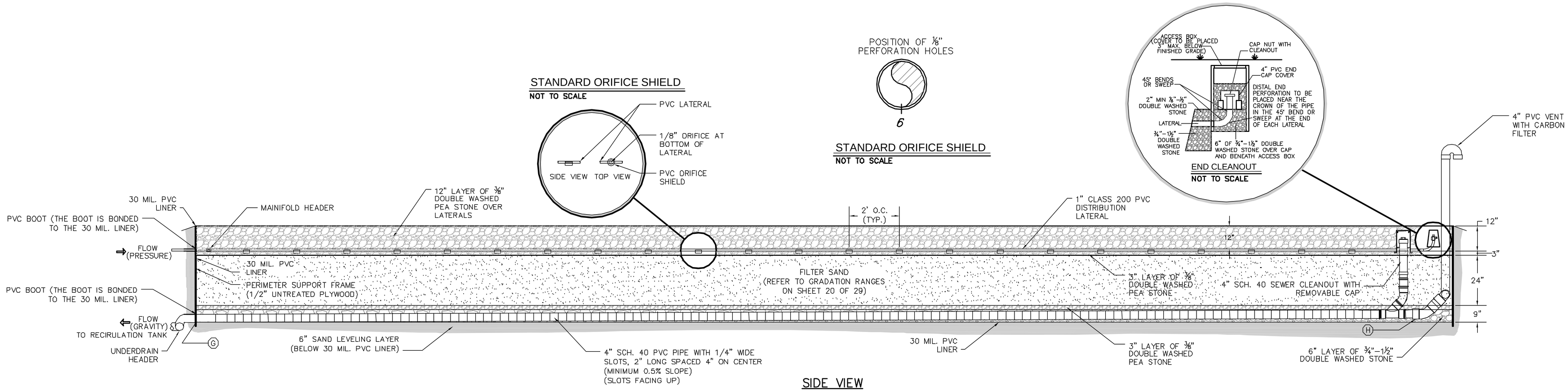

SIDE VIEW
SECTION A – A
(SCALE: 1" = 2')

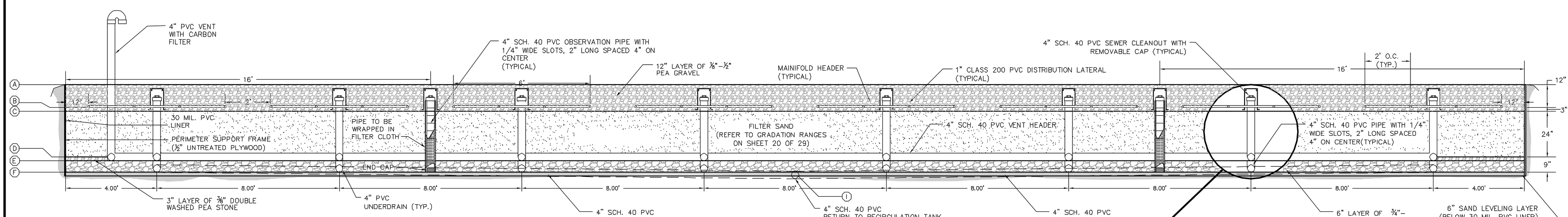

CROSS SECTION
SECTION B – B
(SCALE: 1" = 2')

SCHEDULE OF ELEVATIONS

ELEVATIONS AT EMERSON SCHOOL SAND FILTER	
A	366.00
B	365.00
C	364.75
D	362.75
E	362.50
F	362.00
G	362.00
H	362.32
I	361.68

ELEVATIONS AT FLORENCE SAWYER SCHOOL SAND FILTER	
A	375.00
B	374.00
C	373.75
D	371.75
E	371.50
F	371.00
G	371.00
H	371.32
I	370.68

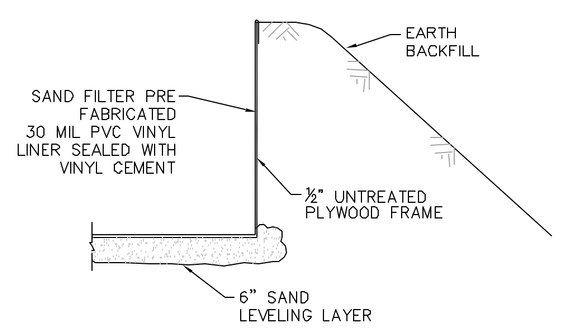

TYPICAL PERIMETER SUPPORT FRAME
FOR SAND FILTER
SCALE: 1"=2'

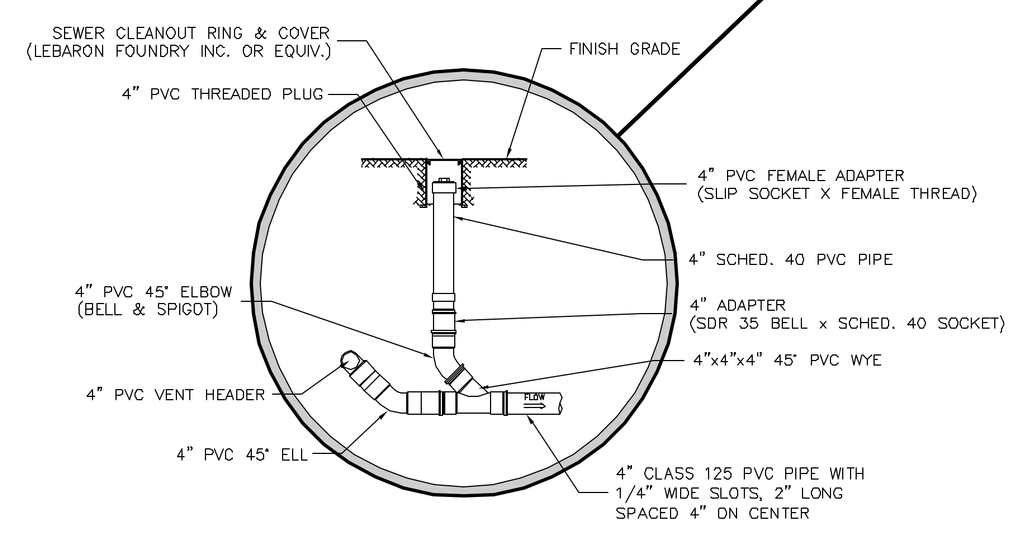

NOTE:
ALL AGGREGATE AND FILTER SAND SHALL MEET THE REQUIREMENTS OF 310 CMR 15.00 AND ALL AGGREGATE AND FILTER SAND SHALL BE VERIFIED FOR CLEANLINESS BY THE ENGINEER PRIOR TO PLACEMENT.

TYPICAL RECIRCULATING SAND FILTER DETAILS
EMERSON AND FLORENCE SAWYER SCHOOLS
50 MECHANIC STREET
BOLTON, MASSACHUSETTS

PREPARED FOR: TOWN OF BOLTON
P.O. 27B
BOLTON, MA 01740

TEL: (978) 779–2297
DATE: MARCH 31, 2004

NO.	DATE	DESCRIPTION	BY		
2.	1/13/05	DEP COMMENTS	LRD	DESIGN BY:	BJD FEB 04
1.	10/27/04	DEP COMMENTS	EAW	DRAWN BY:	BJD FEB 04
				CHECKED BY:	CDM 10/28/04

DUCHARME & WHEELER, INC.
1092 MAIN STREET, P.O.BOX 428, BOLTON, MA., 01740

COPYRIGHT DUCHARME & WHEELER, INC. 2004