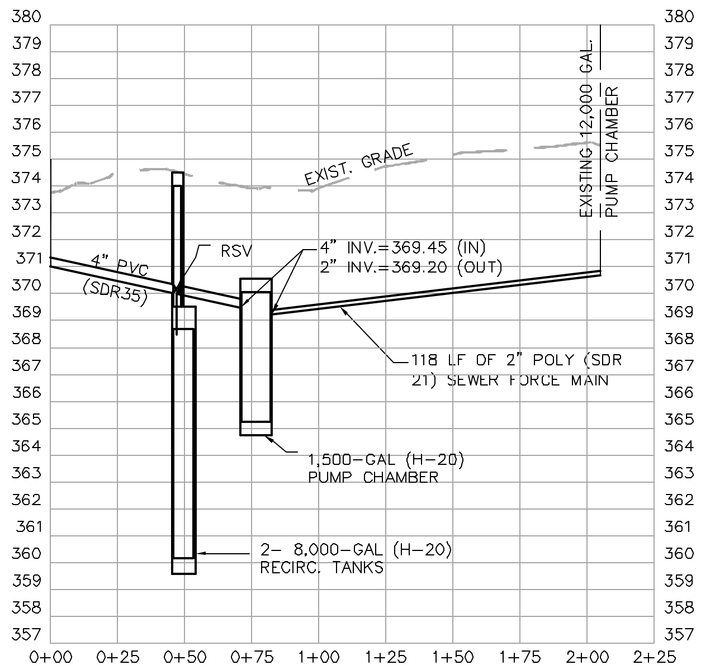

SAWYER PROFILE "B"

SCALE: (HORIZONTAL) 1" = 40'
(VERTICAL) 1" = 4'

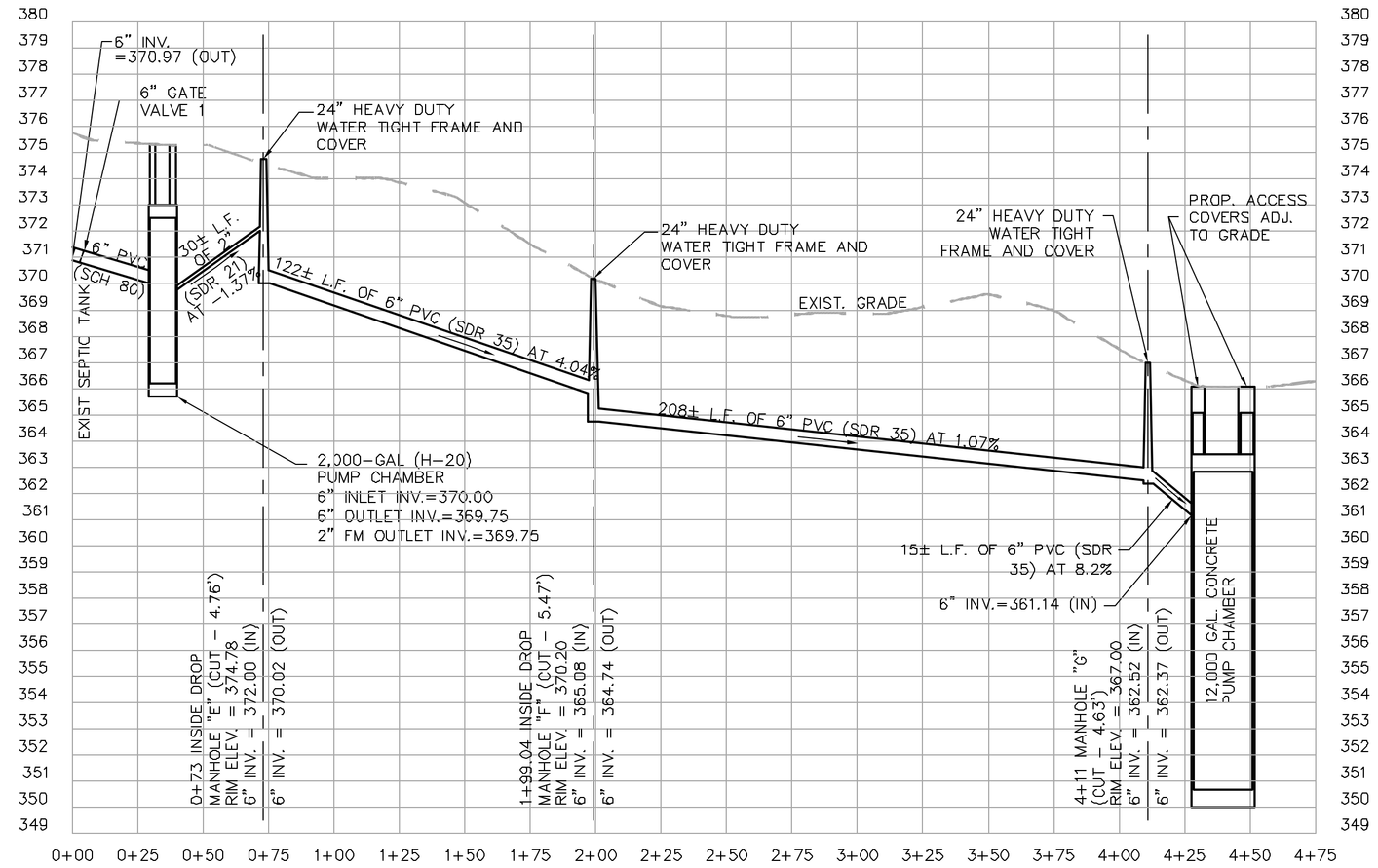

SAWYER PROFILE "C"

SCALE: (HORIZONTAL) 1" = 40'
(VERTICAL) 1" = 4'

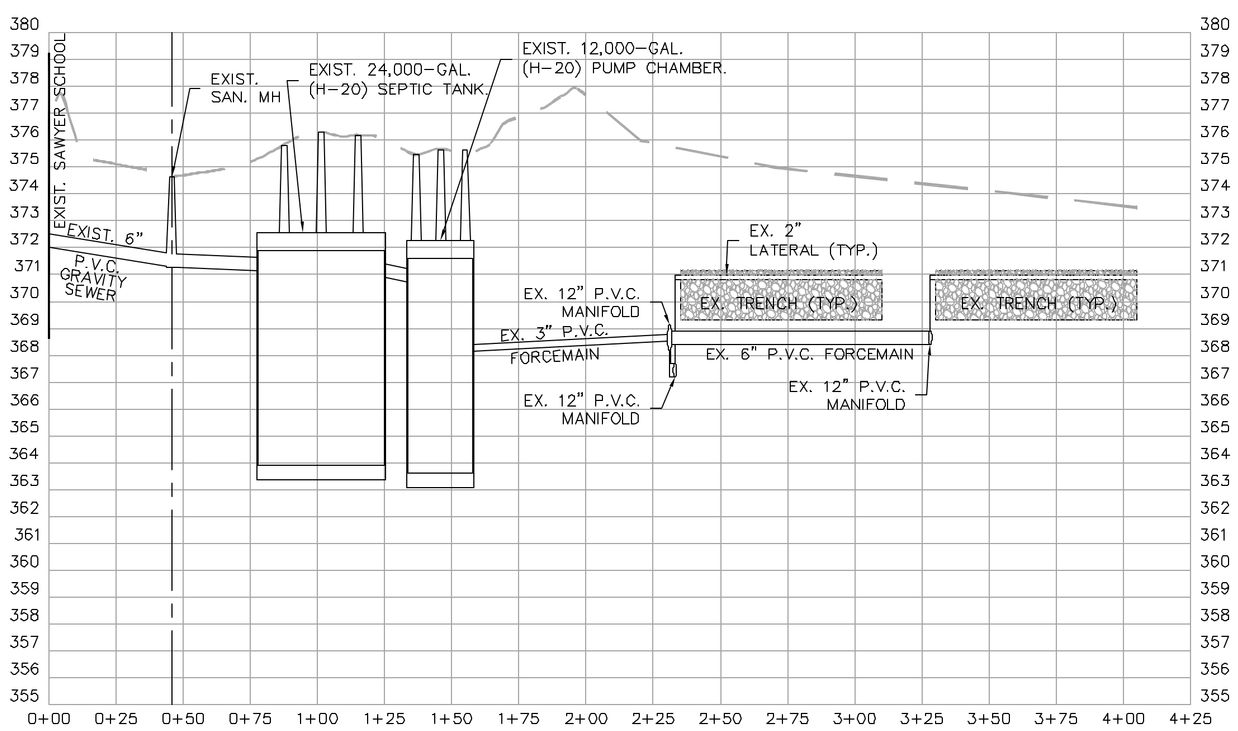

EXISTING SAWYER SDS PROFILE

SCALE: (HORIZONTAL) 1" = 40'
(VERTICAL) 1" = 4'

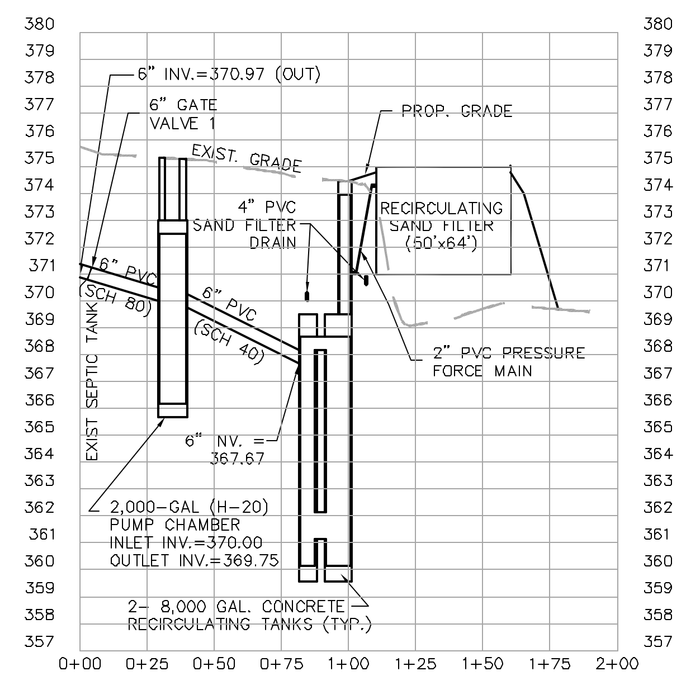

SAWYER PROFILE "A"

SCALE: (HORIZONTAL) 1" = 40'
(VERTICAL) 1" = 4'

FLORENCE SAWYER SCHOOL
SYSTEM PROFILES
50 MECHANIC STREET
BOLTON, MASSACHUSETTS

PREPARED FOR: TOWN OF BOLTON
P.O. 278
BOLTON, MA 01740

TEL: (978) 779-2297
DATE: JULY 16, 2004

NO.	DATE	DESCRIPTION	BY
2.	1/13/05	DEP COMMENTS	LRD
1.	10/26/04	DEP COMMENTS	EAW

DESIGN BY:	BJD FEB 04
DRAWN BY:	BJD FEB 04
CHECKED BY:	CDM 10/28/04

DUCHARME & WHEELER, INC.
1092 MAIN STREET, P.O.BOX 428, BOLTON, MA., 01740

COPYRIGHT DUCHARME & WHEELER, INC. 2004