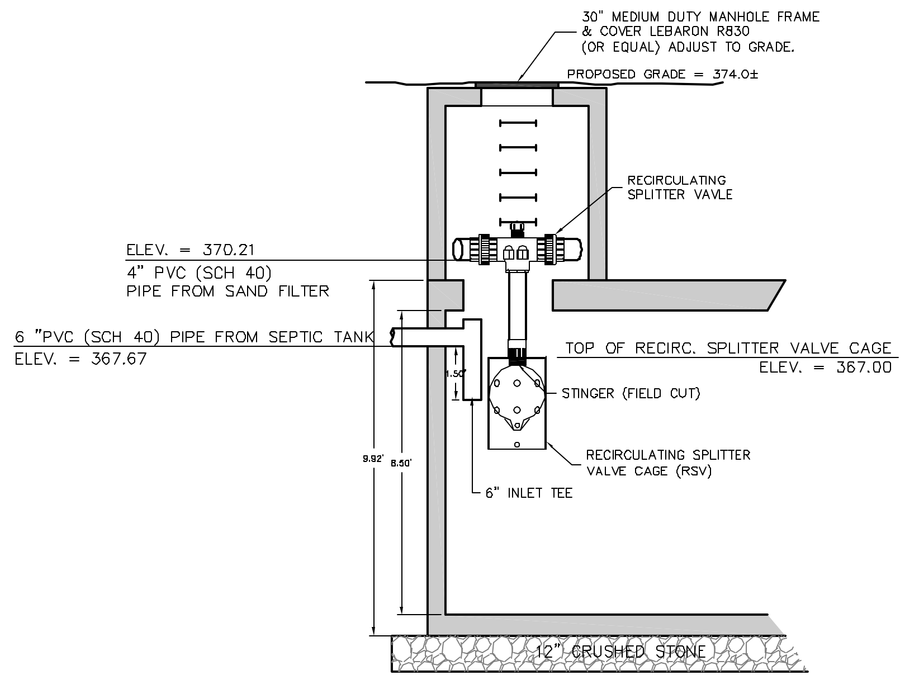

SECTION C-C

SCALE: 1" = 3'

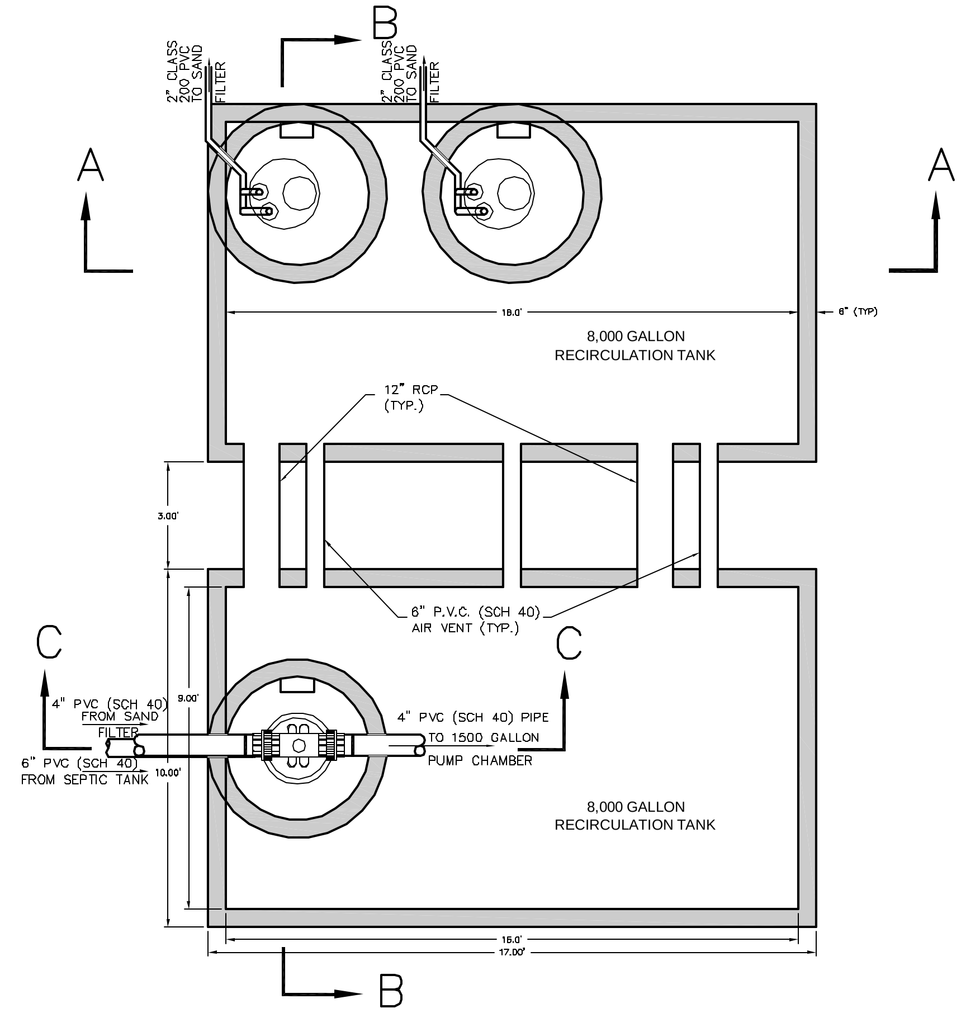

16,000-GAL. RECIRCULATION TANK PLAN VIEW

SCALE: 1" = 3'

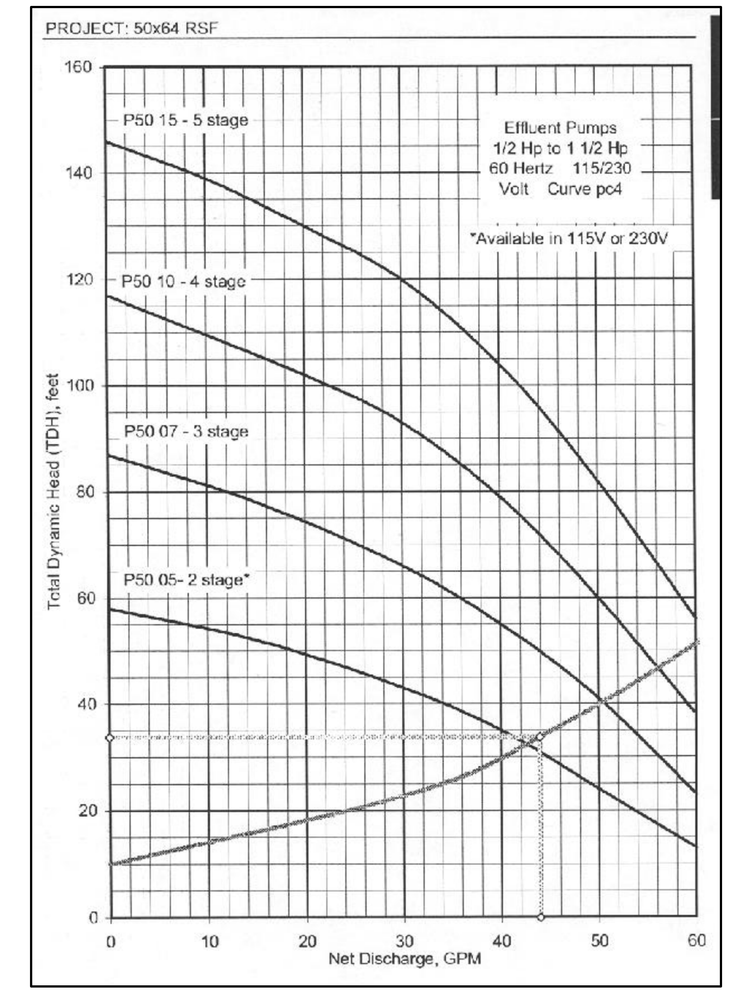

PUMP NOTES - 16,000-GAL. RECIRC. TANK:

1. GENERAL–
FURNISH AND INSTALL A COMPLETE PUMPING SYSTEM CONSISTING OF 2(TWO) SUBMERSIBLE SEWAGE PUMPS AND MOTORS, SLIDE RAIL SYSTEM DISCHARGE PIPING AND VALVES, FLOAT SWITCH CONTROLS, PRECAST CONCRETE PUMP CHAMBER AND ELECTRICAL AND INSTRUMENTATION CONTROLS AND ALARMS AS SHOWN ON ELECTRICAL DRAWINGS. ALL EQUIPMENT SHALL BE INSTALLED IN ACCORDANCE WITH THE MANUFACTURER'S SPECIFICATIONS AND RECOMMENDATIONS AND SHALL BE WARRANTED FOR AT LEAST FIVE YEARS. THE CONTRACTOR SHALL PROVIDE A SUFFICIENT QUANTITY OF CLEAN WATER TO CONDUCT TWO PUMP OPERATION TESTS, AND 24 HOUR EXFILTRATION TEST FOR THE 16,000 GALLON PUMP CHAMBER.

2. PUMP CHAMBER–
THE PUMP CHAMBER SHALL BE A REINFORCED PRECAST CONCRETE STRUCTURE. CONSTRUCTION JOINTS AND OPENINGS SHALL BE SEALED WITH LINK SEALS AT ALL PIPE OPENINGS.

EQUIPMENT WITHIN PUMP CHAMBER IS NOT REQUIRED TO BE EXPLOSION PROOF.

3. PUMP AND MOTOR–
PUMPS AND MOTORS SHALL BE HIGH HEAD SUBMERSIBLE EFFLUENT PUMPS CAPABLE OF PASSING 2–INCH SOLIDS. PUMP AND MOTOR SHALL BE FULLY SUBMERSIBLE AND SHALL OPERATE AT 480V, 60 CYCLE, THREE PHASE AC POWER SOURCE. PUMPS SHALL BE RATED AS FOLLOWS:

H.P. **3/4**
RATE **51** GPM
TDH **41 FT**
MODEL **ORENCO P5007 (WASTEWATER TECHNOLOGIES, INC (877) 212–3219)**

PUMPS SHALL BE FACTORY TESTED PRIOR TO SHIPMENT AND A CERTIFIED FACTORY TEST REPORT SHALL BE PROVIDED TO THE ENGINEER.

4. PIPING–
ALL PIPING OUTSIDE THE PUMP CHAMBER LESS THAN FOUR (4) FEET BELOW THE PROPOSED FINAL GRADE SHALL BE INSULATED. (SEE NOTE 8)

5. PIPE INSULATION–
WHERE FORCE MAIN IS LESS THAN 4–FEET BELOW THE PROPOSED GRADES, IT SHALL BE COVERED WITH 4–INCH, THICK POLYSTYRENE WRAPPED INSULATION.

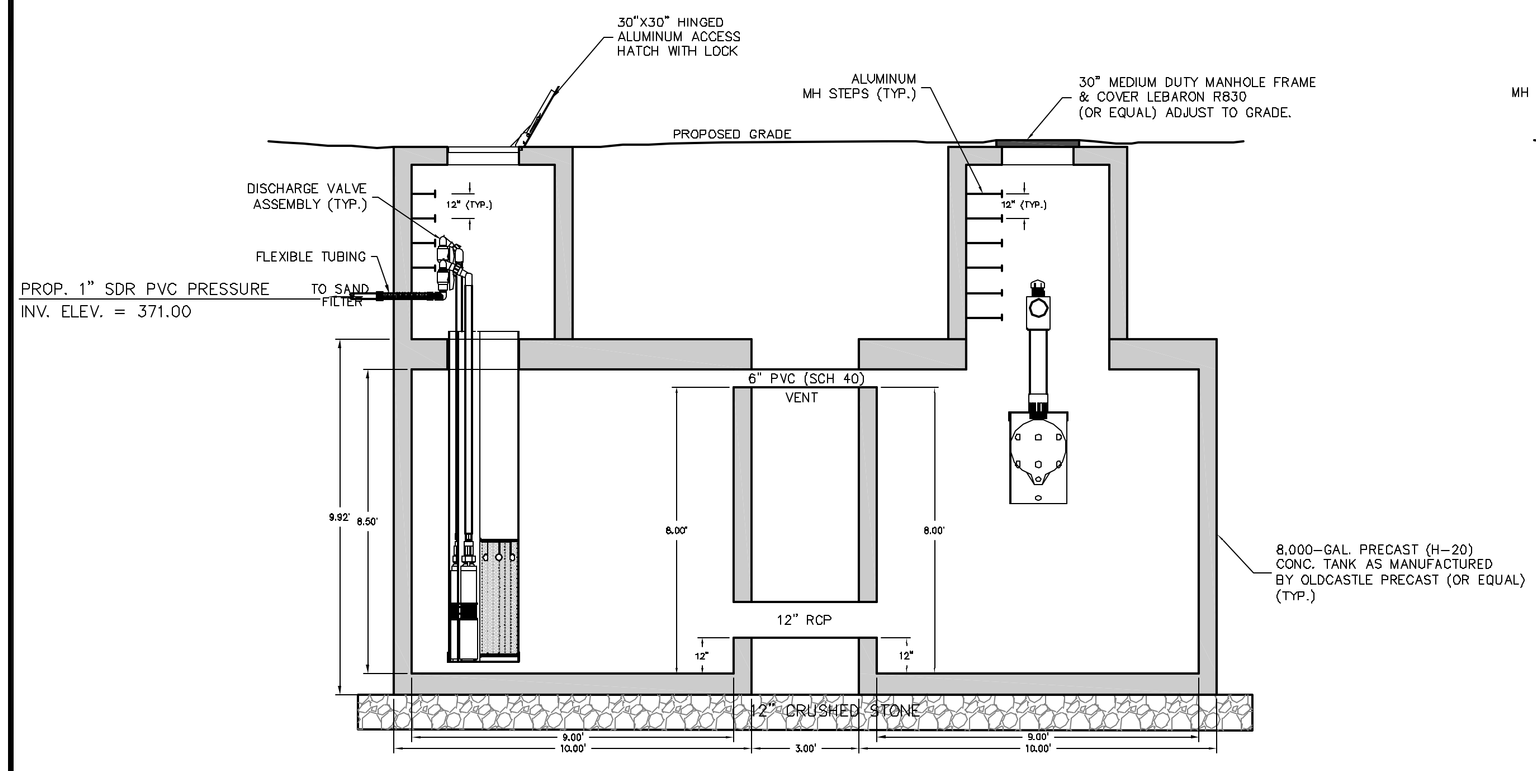

SECTION B-B

SCALE: 1" = 3'

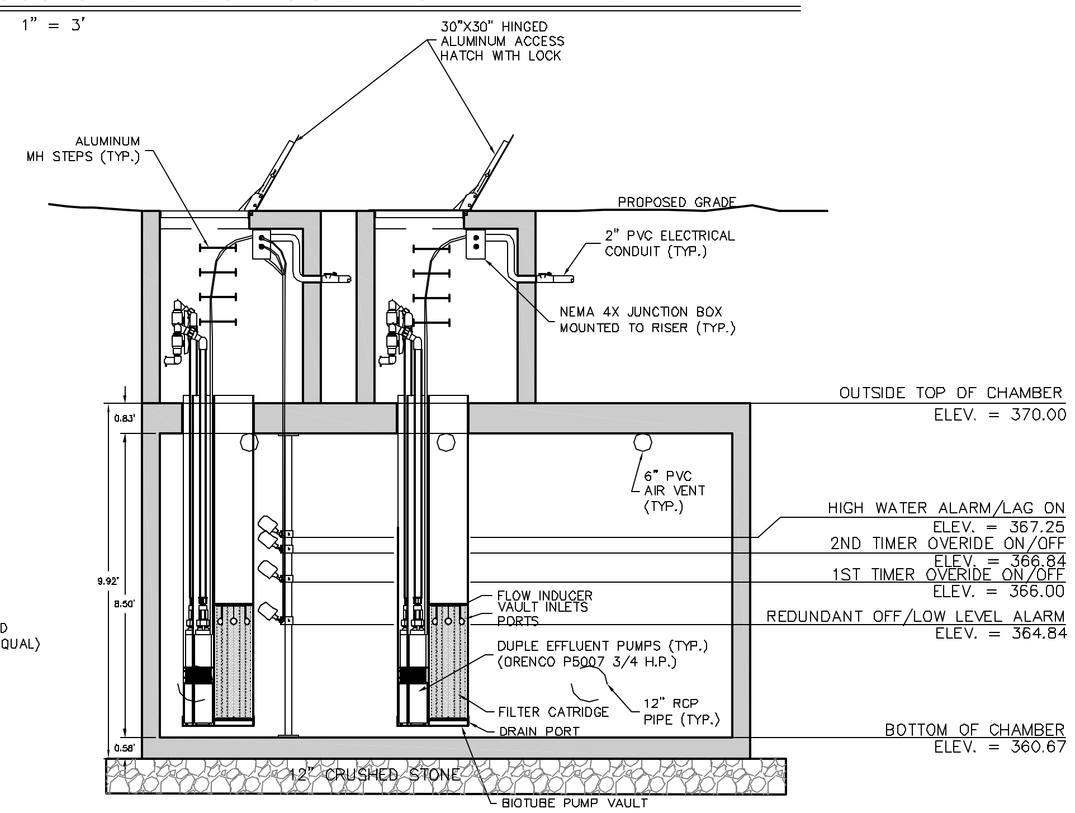

SECTION A-A

SCALE: 1" = 3'

FLORENCE SAWYER SCHOOL – PROPOSED 16,000 GAL. RECIRCULATION TANK

50 MECHANIC STREET
BOLTON, MASSACHUSETTS

PREPARED FOR: TOWN OF BOLTON
P.O. 278
BOLTON, MA 01740

TEL: (978) 779–2297
DATE: JULY 16, 2004

NO.	DATE	DESCRIPTION	BY
1.	10/26/04	DEP COMMENTS	EAW

DESIGN BY:	GSR FEB 04
DRAWN BY:	GSR FEB 04
CHECKED BY:	CDM 10/28/04

DUCHARME & WHEELER, INC.
1092 MAIN STREET, P.O.BOX 428, BOLTON, MA., 01740

COPYRIGHT DUCHARME & WHEELER, INC. 2004