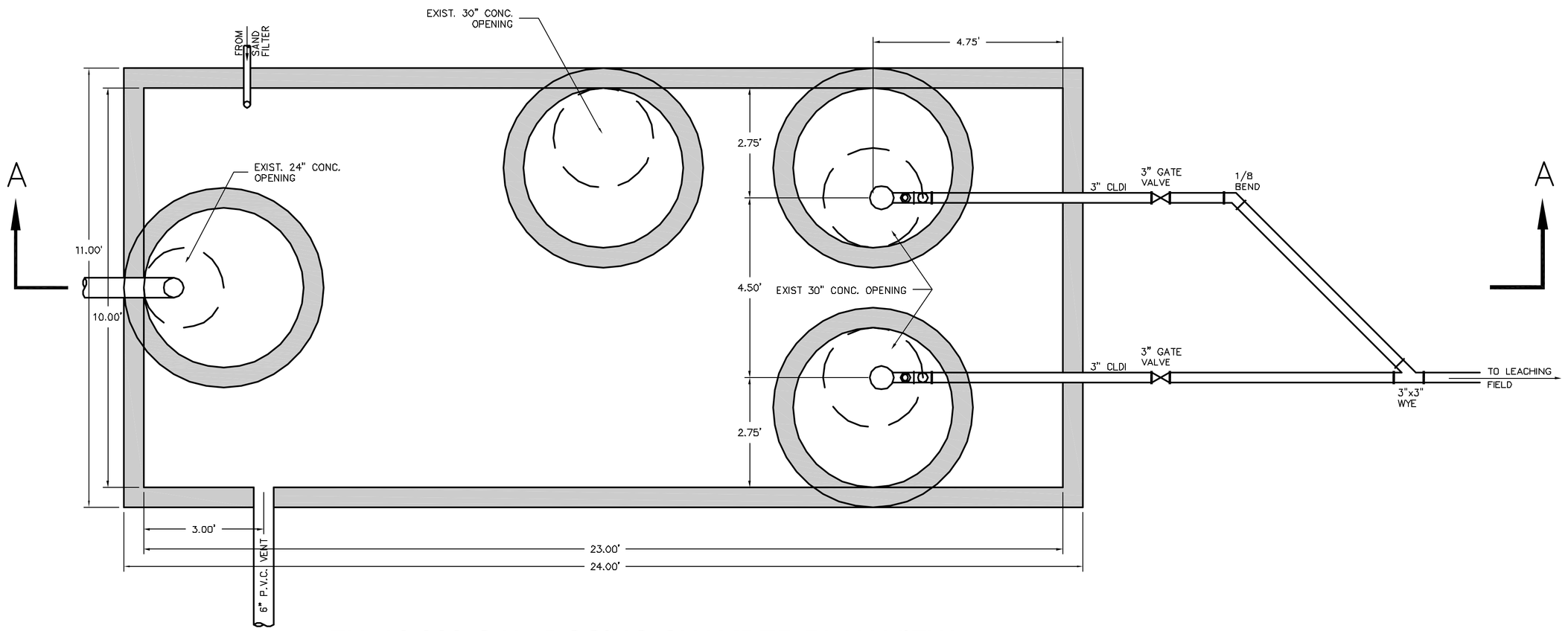

EX. 12,000-GAL. DOSING CHAMBER PLAN VIEW

SCALE: 1" = 2'

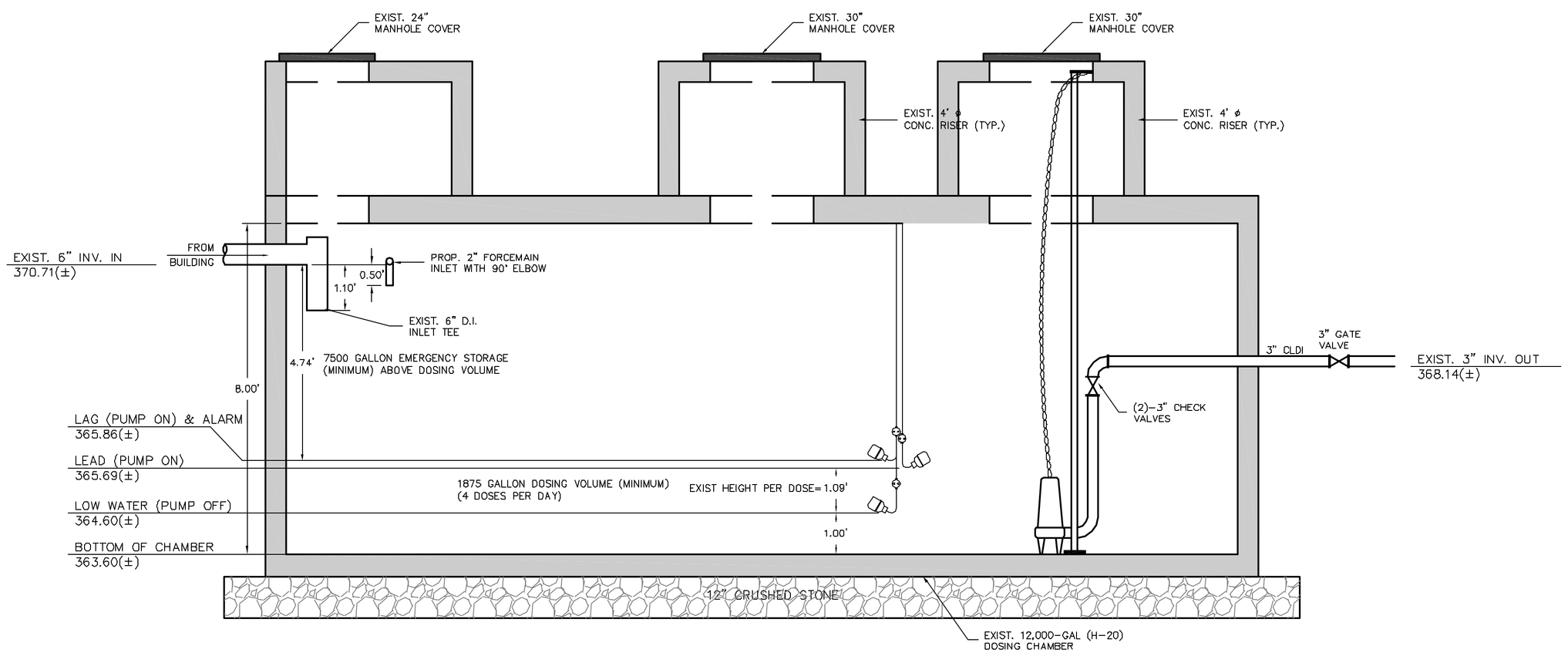

SECTION A-A

SCALE: 1" = 2'

FLORENCE SAWYER SCHOOL – EXISTING 12,000 GAL. PUMP CHAMBER

50 MECHANIC STREET
BOLTON, MASSACHUSETTS

PREPARED FOR: TOWN OF BOLTON
P.O. 278
BOLTON, MA 01740

TEL: (978) 779-2297
DATE: JULY 16, 2004

NO.	DATE	DESCRIPTION	BY
1.	10/26/04	DEP COMMENTS	EAW

DESIGN BY:	GSR FEB 04
DRAWN BY:	GSR FEB 04
CHECKED BY:	CDM 10/28/04

DUCHARME & WHEELER, INC.

1092 MAIN STREET, P.O.BOX 428, BOLTON, MA., 01740

COPYRIGHT DUCHARME & WHEELER, INC. 2004