J.N.2421

PUMP NOTES:
12,000-GAL. PUMP CHAMBER

1. GENERAL–
FURNISH AND INSTALL A COMPLETE PUMPING SYSTEM CONSISTING OF 2(TWO) SUBMERSIBLE SEWAGE PUMPS AND MOTORS, SLIDE RAIL SYSTEM DISCHARGE PIPING AND VALVES, FLOAT SWITCH LEVEL CONTROLS, PRECAST CONCRETE PUMP CHAMBER, AND ELECTRICAL AND INSTRUMENTATION CONTROLS AND ALARMS AS SHOWN OF ELECTRICAL DRAWINGS. ALL EQUIPMENT SHALL BE INSTALLED IN ACCORDANCE WITH THE MANUFACTURER'S SPECIFICATIONS AND RECOMMENDATIONS AND SHALL BE WARRANTED FOR AT LEAST FIVE YEARS. THE CONTRACTOR SHALL PROVIDE A SUFFICIENT QUANTITY OF CLEAN WATER TO CONDUCT TWO PUMP OPERATION TESTS, AND 24 HOUR EXFILTRATION TEST FOR THE 12,000 GALLON PUMP CHAMBER.

2. PUMP CHAMBER–
THE PUMP CHAMBER SHALL BE A REINFORCED PRECAST CONCRETE STRUCTURE. CONSTRUCTION JOINTS AND OPENINGS SHALL BE SEALED WITH LINK SEAL AT ALL OPENINGS.

EQUIPMENT WITHIN PUMP CHAMBER NOT REQUIRED TO BE EXPLOSION PROOF.

3. PUMP AND MOTOR–
BOTH PUMPS AND MOTORS SHALL BE MEYERS SUBMERSIBLE SEWAGE PUMP CAPABLE OF PASSING 2–INCH SOLIDS. PUMP AND MOTOR SHALL BE FULLY SUBMERSIBLE AND SHALL OPERATE AT 3450 RPM WITH A 430V, 60 CYCLE, THREE PHASE AC POWER SOURCE. PUMPS SHALL BE RATED AS FOLLOWS:

H.P. **1**
RATE **60** GPM
TDH **38 FT**
MODEL **MEYERS MW100 (GPM EQUIPMENT, INC. (508) 224–9020)**

PUMPS SHALL BE FACTORY TESTED PRIOR TO SHIPMENT AND A CERTIFIED FACTORY TEST REPORT SHALL BE PROVIDED TO THE ENGINEER.

4. PIPING–
2–INCH PVC (SDR 21) PIPE AND FITTINGS SHALL BE USED FOR INTERIOR PUMP CHAMBER. THE SEWAGE FORCE MAIN SHALL BE 2–INCH DIAMETER SDR 21 PVC PIPE. EACH DISCHARGE LINE WITHIN THE PUMP CHAMBER SHALL INCLUDE THE FOLLOWING:

1) IN THE VERTICAL POSITION: A 2–INCH CHECK VALVE
2) IN THE HORIZONTAL POSITION: A 2–INCH GATE VALVE

ALL PIPING OUTSIDE THE PUMP CHAMBER LESS THAN FOUR (4) FEET BELOW THE PROPOSED FINAL GRADE SHALL BE INSULATED. (SEE NOTE 8)

5. PIPE INSULATION–
WHERE FORCE MAIN IS LESS THAN 4–FEET BELOW THE PROPOSED GRADES, IT SHALL BE COVERED WITH 4–INCH, THICK POLYSTYRENE WRAPPED INSULATION.

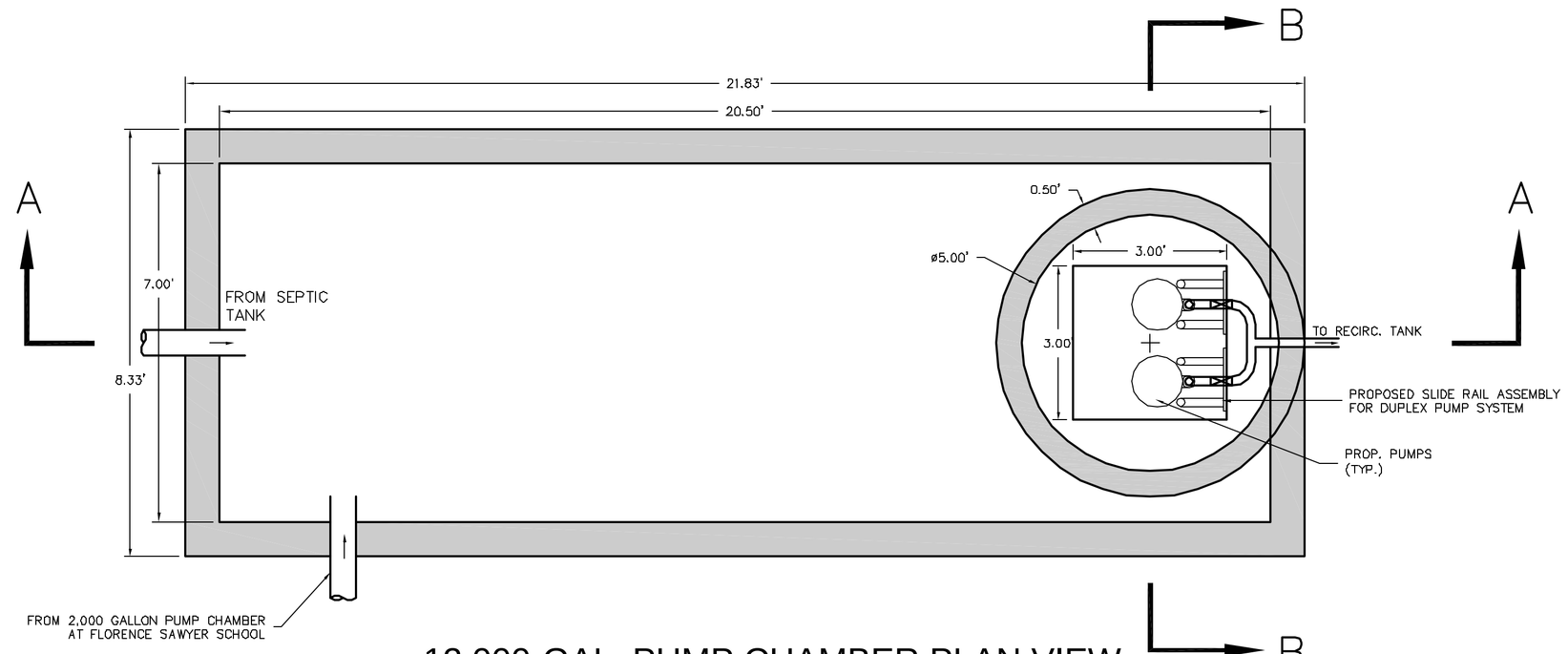

12,000-GAL. PUMP CHAMBER PLAN VIEW
SCALE: 1" = 2'

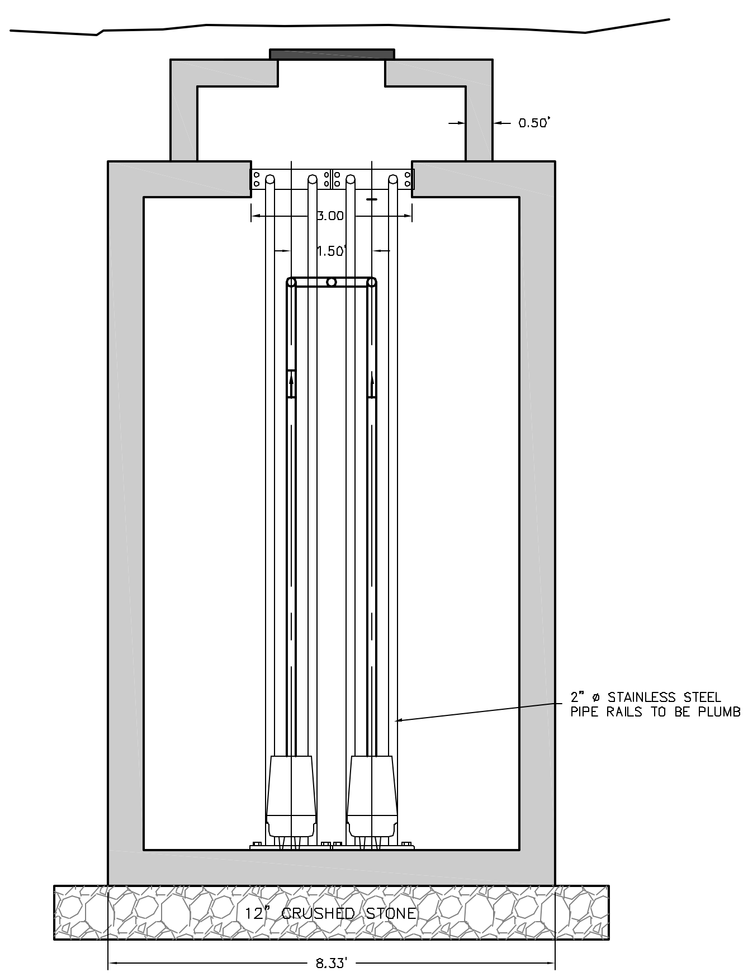

SECTION B-B
SCALE: 1" = 2'

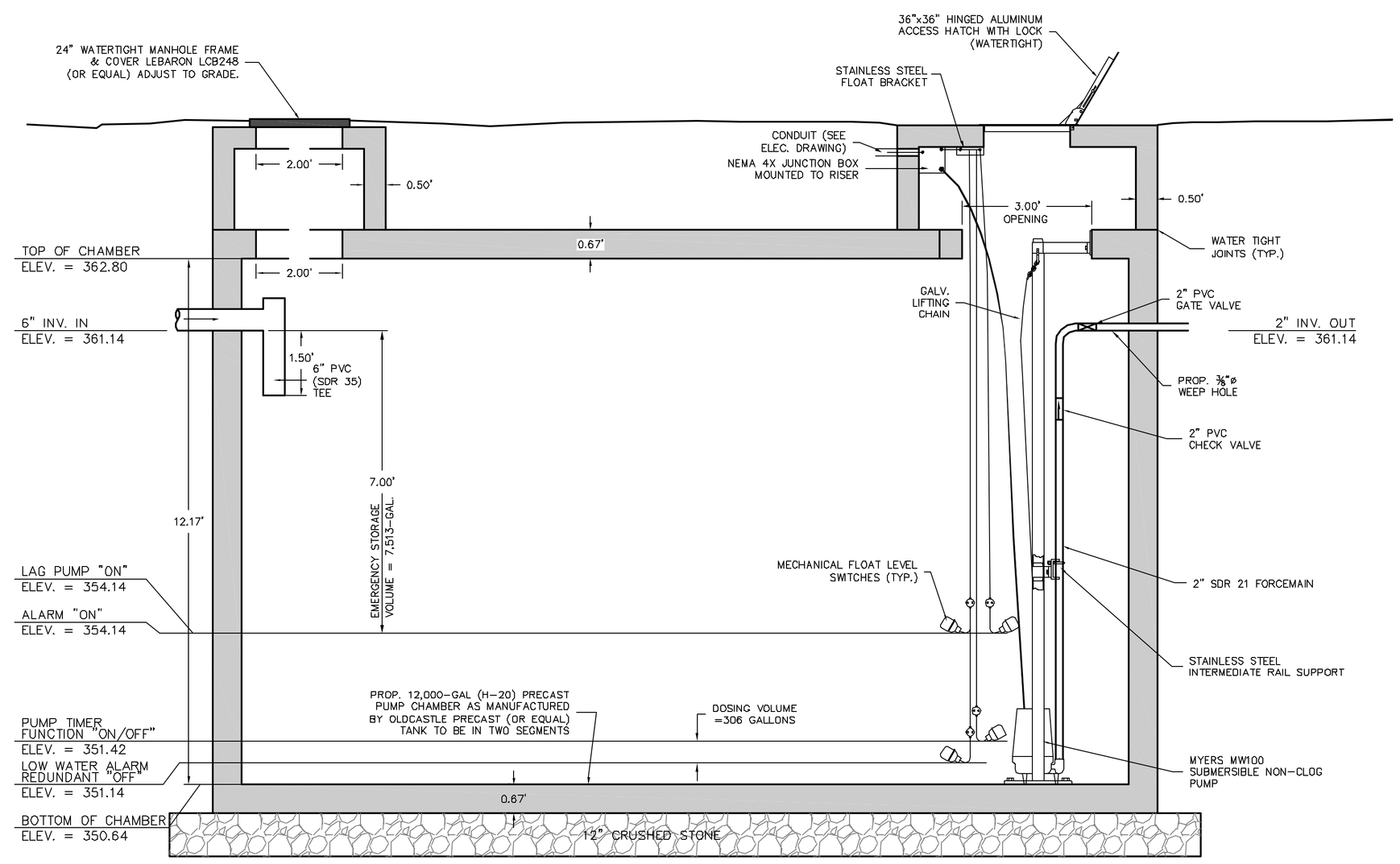

SECTION A-A
SCALE: 1" = 2'

NOTES:

1. ELECTRICAL COMPONENTS WITHIN THE PUMP CHAMBER ARE NOT REQUIRED TO BE EXPLOSION PROOF.

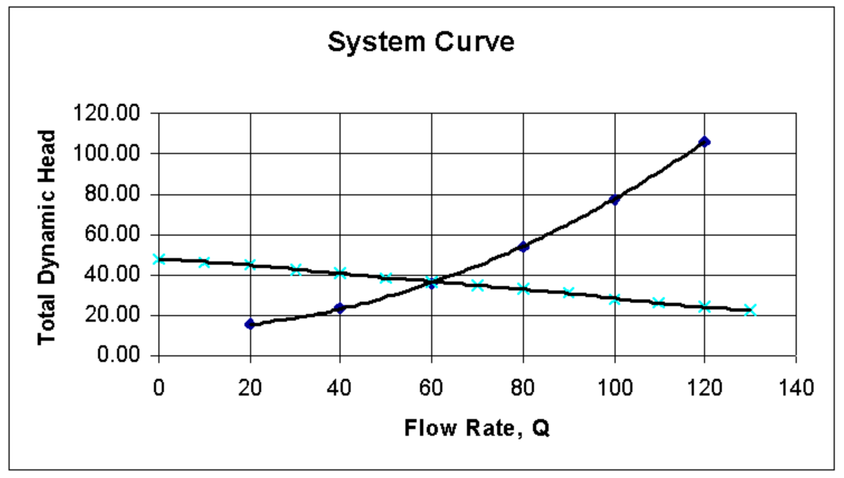

EMERSON SCHOOL – PROPOSED 12,000–GAL PUMP CHAMBER
50 MECHANIC STREET
BOLTON, MASSACHUSETTS

PREPARED FOR: TOWN OF BOLTON
P.O. 278
BOLTON, MA 01740

TEL: (978) 779–2297
DATE: MARCH 31, 2004

NO.	DATE	DESCRIPTION	BY		
				DESIGN BY:	GSR FEB 04
				DRAWN BY:	GSR FEB 04
2	1/13/05	DEP COMMENTS	LRD		
1	7/16/04	DEP COMMENTS	GSR	CHECKED BY:	CDM 10/28/04

DUCHARME & WHEELER, INC.
1092 MAIN STREET, P.O.BOX 428, BOLTON, MA., 01740

COPYRIGHT DUCHARME & WHEELER, INC. 2004